FSC
www.fsc.org
MIX
Paper from responsible sources
FSC® C114821

RECYCLED PAPER

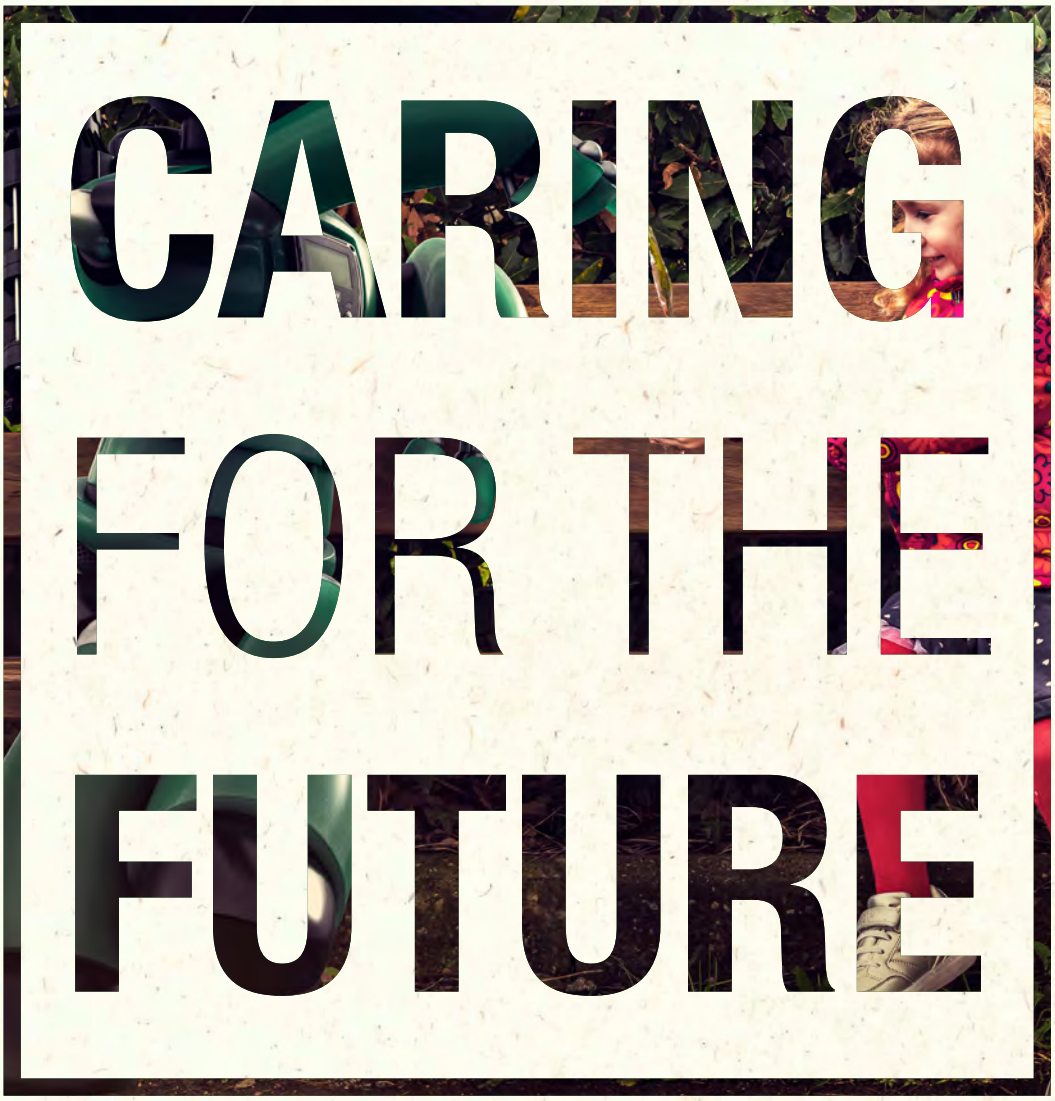

CATALOG
CANADA 60Hz

DAB®
WATER•TECHNOLOGY



It's not just a matter of talking about performance or technical features, or even stating that we are better than the competition.

We really need to start from people; from users. And if we give them something that can simplify or improve their lives, then they will be happy to follow us.

DAB®
WATER•TECHNOLOGY



WATER BOOSTING



CONDITIONING



GARDENING & IRRIGATION



HEATING

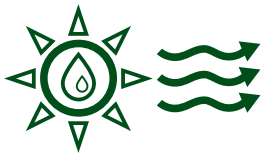

SOLAR HEATING



HOT WATER



DRAINAGE



EFFLUENT

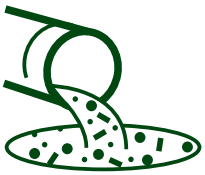

SEWAGE

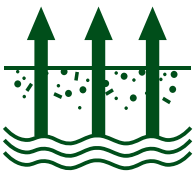

GROUND WATER



MACERATORS

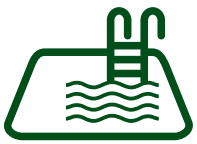

SWIMMING POOL



RAIN WATER REUSE



FIRE FIGHTING



IRRIGATION SYSTEMS

DCONNECT PAGE 5

ESYBOX LINE PAGE 13

CENTRIFUGAL & JET PAGE 35

SUBMERSIBLE PUMPS AND MOTORS PAGE 62

SUMP & SEWAGE PAGE 123

HVAC PAGE 155

SWIMMING POOL PAGE 197

LEARNING

THE PROFESSIONAL TRAINING BY

DAB
WATER•TECHNOLOGY

DISTANT **BUT CONNECTED.**
MORE THAN EVER.



Meet our experts with **training sessions** available at any time, **live webinars, technical discussions, and both live and on-demand content** covering all the latest DAB products.

DLEARNING.DABPUMPS.COM



D+ CONNECT

CONTROL AND MANAGE YOUR INSTALLATIONS IN REAL TIME, WHEREVER YOU ARE

DConnect is the DAB cloud service, that allows you to remotely monitor and manage functional parameters of your pumps. Moreover, thanks to DConnect you can reset faults and alarms on site, if necessary. You only need an available Internet connection and a smartphone, a pc or a tablet.
It's also suitable for pre-existing installations.

YOUR SYSTEMS ARE JUST A CLICK AWAY

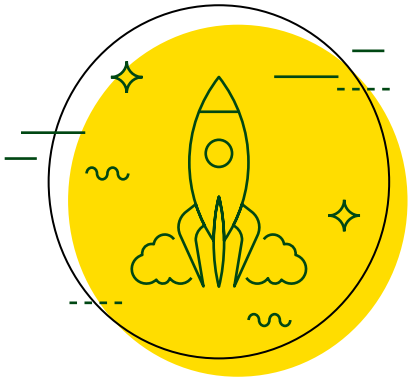

THE SERVICE THAT MAKES LIFE EASIER

DConnect makes monitoring DAB products easy and intuitive.
All adjustments are also possible remotely.
For total control with no surprises.

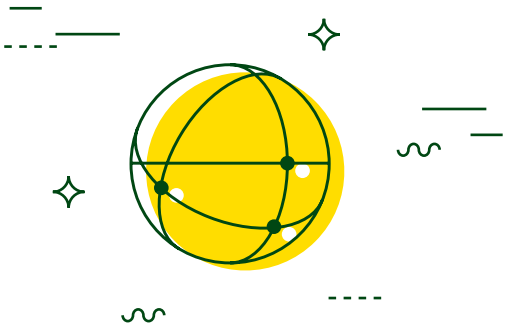

IMMEDIATELY READY TO USE

DConnect does not require specific infrastructures. The installation only requires an internet connection and a smartphone.
Just follow the few steps of the connection wizard to connect your pumps.

WE ARE VERY CAREFUL ABOUT YOUR SAFETY

Dab takes data safety very seriously. This is why DConnect products are continuously updated and improved, to make sure that they always comply with the latest standards, in order to counteract any effects of the new dangers that are discovered every day.

TECHNOLOGY FOR EVERYONE

Based on state-of-the-art technology, the DConnect system offers many advantages over typical BMS systems.

UNRIVALLED ADVANTAGES

DConnect

TAILOR DESIGN
Developed for both residential and commercial building service application.

USE
No fixed work station is required as the DConnect is all about portability, the only thing you need is a internet connection.

SOFTWARE & HARDWARE
You do not need to buy any expensive software, nor do you need to pay for updates or for dedicated work stations.

VALUE
It lowers the overhead costs, increasing the value of your building.

D+ CONNECT BOX



DConnect Box 2 expands the range of DConnect products. This latest addition is the ideal solution for small systems (connection of up to 4 products). It joins big brother DConnect Box, which can manage larger systems (connection of up to 8 products), and is compatible with a wide range of DAB products.
Both can also be used on already installed products. All that is required is constant internet access at the place of installation.

APP & CLOUD

Using the DConnect App, available on App Store and Google Play, it is possible to check the settings of compatible products.
Taking advantage of the Cloud service, through the website **internetofpumps.com or the DConnect App,** it is also possible to remotely check the installation and receive alarms in real time, wherever you are, through an extremely clear and functional user interface.

Download on the App Store

ANDROID APP ON Google play

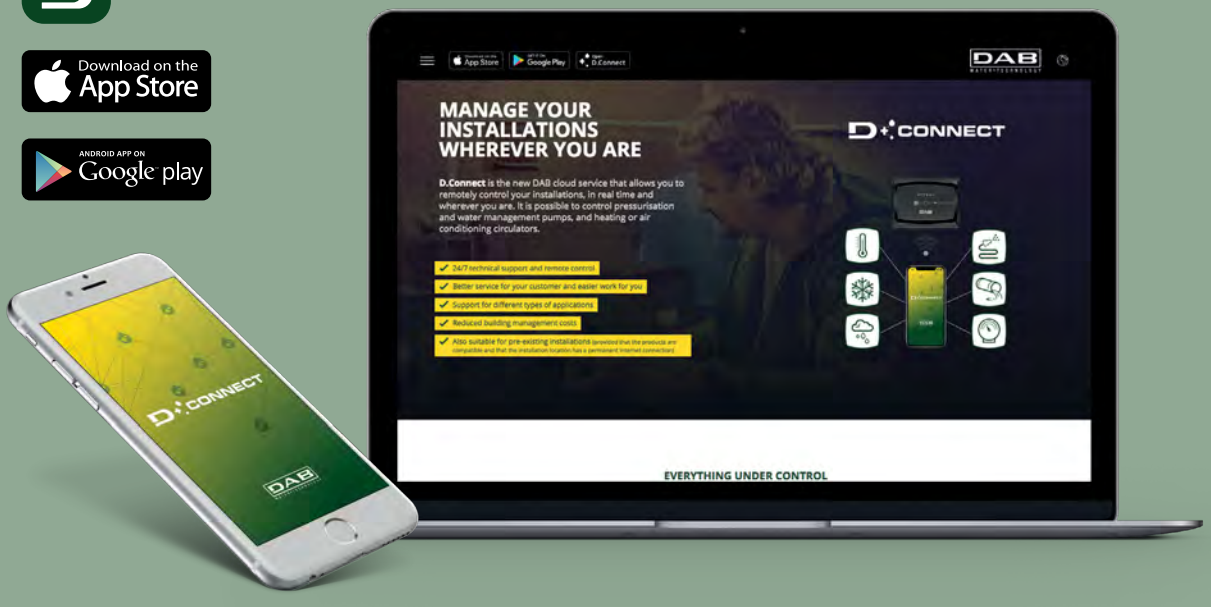

INTERNETOFPUMPS.COM

A SINGLE INTERFACE FOR EVERY APPLICATION

DConnect is suitable for pressurization systems, circulation systems and for installations for the recovery of waste water.

IT represents a high added value service that can be used with any system, irrespective of its nature and size and in the same environment and with the same instruments, from the individual houses to large structures.

Being modular, DConnect can manage up to 8 different electronic pumps in a highly simple and integrated manner.

HEATING

CONDITIONING

RAIN WATER

GARDENING & IRRIGATION

WATER BOOSTING

WASTE WATER



SMART BUILDING MANAGEMENT

DConnect permits easier, controlled and more rational management of the system, lowering the overhead costs and increasing the absolute value of the building in terms of efficiency and overall comfort.

WITH EACH QUESTION, AN ANSWER! SCAN THE QR CODE AND CONSULT OUR FAQ SECTION

OPERATION DIAGRAM

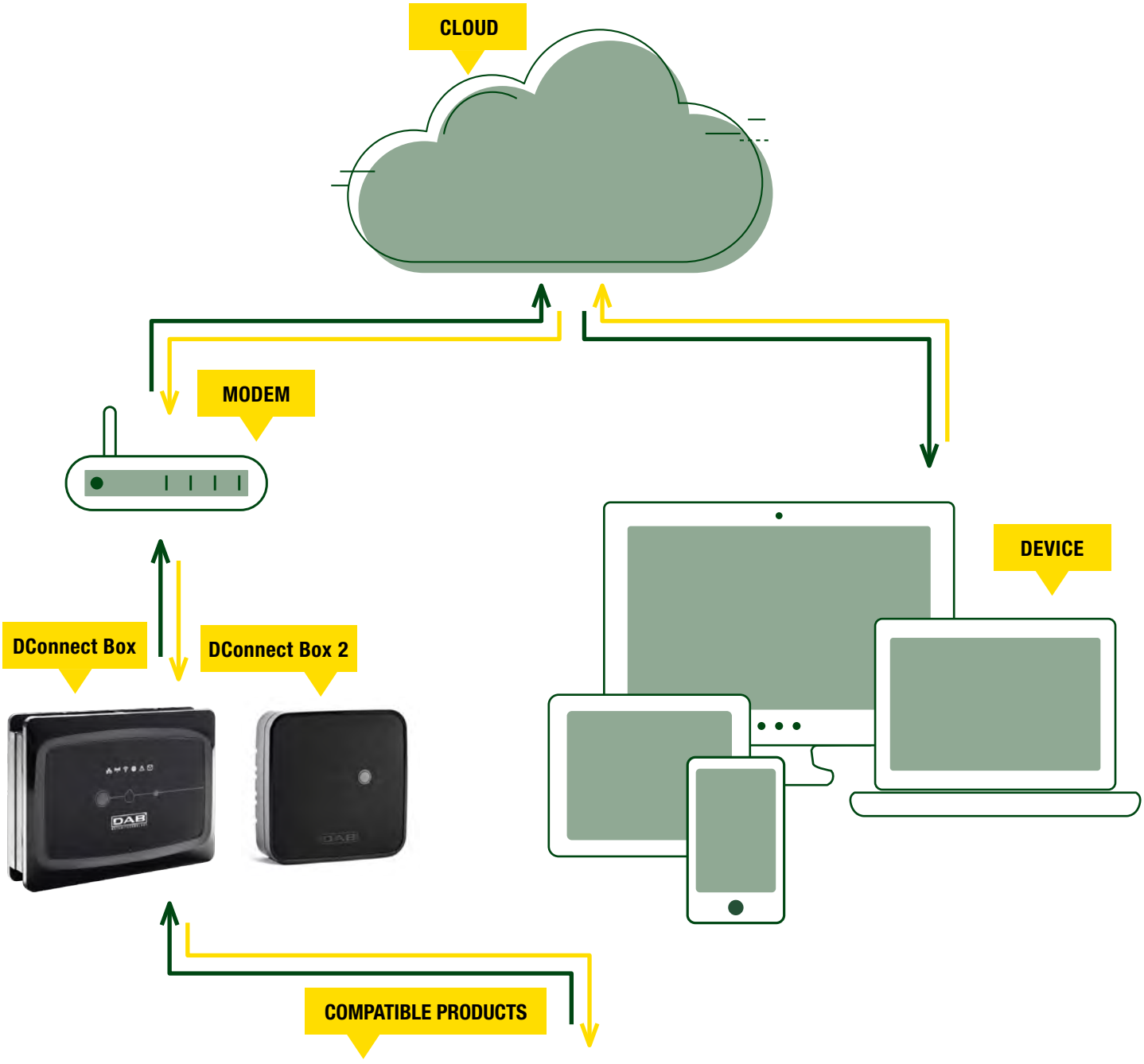

For more information visit: **internetofpumps.com**

COMPATIBLE PRODUCTS CONNECTIONS





DCONNECT BOX & ACCESSORIES

MODEL		CODE
	**ETHERNET CABLE 7 ft** **(to use in case of LAN connection)**	60188146
	**DCONNECT BOX BMS ADAPTER KIT (MODBUS RTU RS485)**	60198693
	**DCONNECT BOX PANEL - IP 65** **(DConnect Box included)**	60198153
	**DCONNECT BOX**	60172819
	**DCONNECT BOX 2**	60198035 NEMA 5 PLUG to 120v NEMA 5/15P
		60198037 NEMA 6 PLUG to 230v NEMA 6/15P





D+ CONNECT

AFFORDABLE WEB BASED REMOTE CONTROL FOR EVERYONE

DConnect is the new DAB cloud service that allows you to remotely control your installations, in real time and wherever you are.

- READY TO USE
- ALWAYS CONNECTED
- CLOSE TO THE CUSTOMER

INTERNETOFPUMPS.COM

DAB WATER•TECHNOLOGY

INDEX - ESYBOX LINE



ESYBOX MINI³
ELECTRONIC PRESSURISATION SYSTEM

PAGE 14



ESYBOX
ELECTRONIC PRESSURIZATION SYSTEM

PAGE 16



ESYBOX DIVER
7" MULTISTAGE SUBMERSIBLE PUMPS WITH VARIABLE FREQUENCY DRIVE

PAGE 19



ESYBOX MAX
ELECTRONIC BOOSTER SET

PAGE 22

ACCESSORIES

PAGE 18-21-31

ESYBOX MINI³

ELECTRONIC PRESSURISATION SYSTEM



esybox mini³

ESYBOX MINI³ is the DAB compact automatic pressurisation system for the water supply of a single dwelling. ESYBOX MINI³ guarantees the comfort of constant pressure (Pressure Set Point adjustable from 15 up to 80 psi)(1 up to 5.5 baR) inside the system, and energy savings thanks to the inverter technology. Suitable for use with drinking water, in domestic systems, and in gardening applications. ESYBOX MINI³ does not require any additional components for its installation.
It consists of a high frequency self-priming tripple impeller pump, management inverter electronics, pressure and flow sensors, adjustable high resolution LCD display with 0.2 gal (1 Ltr) built-in expansion tank, and cartridge check valve.
The double suction and delivery ports allow both vertical and horizontal installation. Thanks to its compact sizes, installation is also possible in difficult places without high air exchange.

Operating range
up to 21.1 gpm (4.8m³/h) head up to 180 ft (55 m)

Liquid quality requirements clean, free from solid or abrasive contaminants, non-viscous, non-aggressive, uncrystallised and chemically neutral.

Liquid temperature range from 32°F to +95 °F (0°C to +35°C) for domestic use

for other use from 32°F to +104°F (0°C to +40°C) Maximum suction depth 26 ft (8 meters)

Maximum ambient temperature +122 °F (+50°C)

Maximum operating pressure 109 psi (7.5 bar)

Motor protection rating IPX4

Insulation class F

Installation horizontal or vertical fixed position

Special versions on request
alternative types of electrical plug

D+ CONNECT PAG. 5 ACCESSORIES PAG. 18 - 31

TECHNICAL DATA

MODEL	CODE
ESYBOX MINI ³ DV NPT USA PLUG	60188927

N° IMPELLERS	ELECTRICAL DATA				HYDRAULIC DATA									DNA NPT	DNM NPT
	VOLTAGE 50 - 60 Hz	P1 MAX		In A	Q=GPM	2.6	5.3	7.9	10.6	13.2	15.8	18.5	21.1		
		kW	HP		Q=l/min	10	20	30	40	50	60	70	80		
3	1x115-127V ~	0.85	1.1	4.8	H (ft)	180	180	161	128	102	75	46	13	1"	1"
	1x208-240V~			9.6	H (m)	55	55	49	39	31	23	14	4		

* By replacing the existing NEMA5-15P plug with a NEMA6-15P plug the pump can operate at 1x 208-240 V

APPLICATIONS

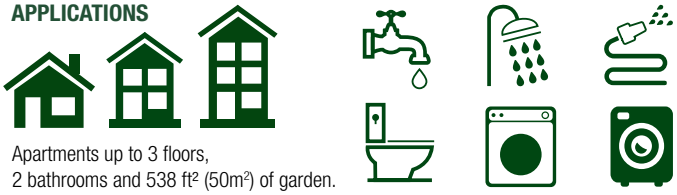

Apartments up to 3 floors,
2 bathrooms and 538 ft² (50m²) of garden.

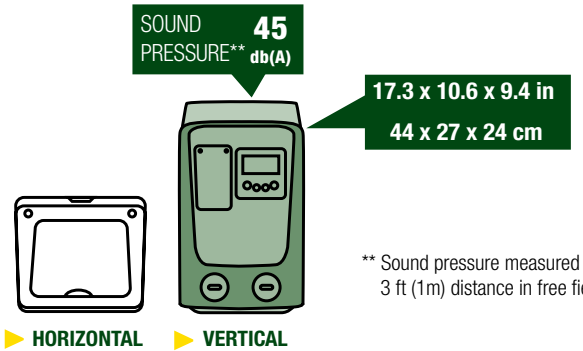

** Sound pressure measured at 3 ft (1m) distance in free field

SUITABLE FOR PUMPING WATER FROM:

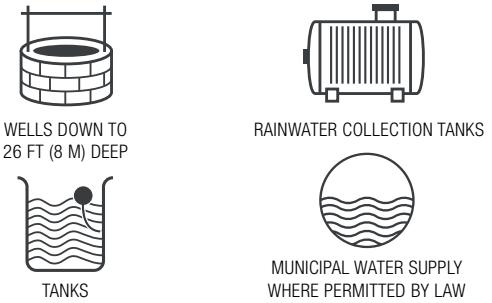





ESYBOX MINI³

ELECTRONIC PRESSURISATION SYSTEM

RANGE PERFORMANCE

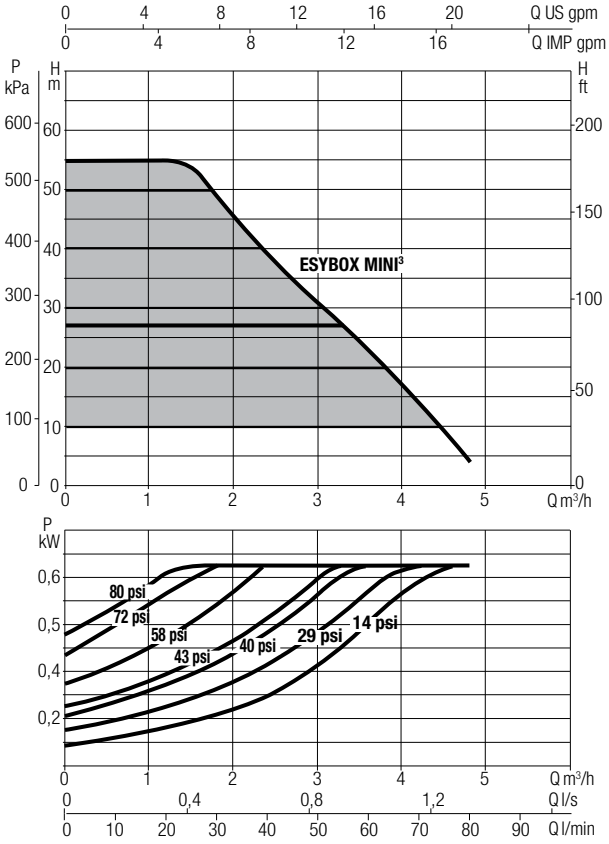

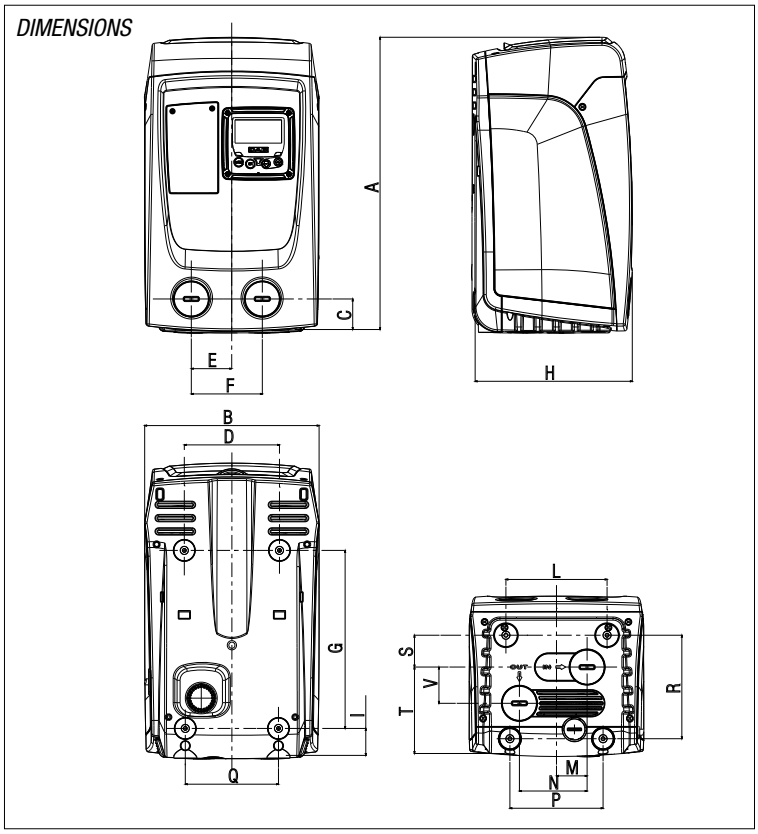

DIMENSIONS AND WEIGHTS

MODEL	Units	A	B	C	D	E	F	G	H	I	L	M	N	P	Q	R	S	T	V	DNA	DNM	PACKING DIMENSIONS			WEIGHT	Q.TY x PALLET
																						L/A	L/B	H		
ESYBOX MINI ³ DV NPT	Inches	17.3	10.4	1.8	5.6	2.4	4.2	10.5	9.3	1.6	6	1.8	4	5.5	5.5	6.1	1.9	5.1	2.1	1“	1“	11.8	19.7	12.6	32.2 lbs	18
	mm	439	263	46	143	60.7	106.7	267.5	236	40.5	152	46	101.7	140	140	155.5	47.8	130	54.5			300	500	320	14.6 Kg	

ESYBOX

ELECTRONIC PRESSURIZATION SYSTEM



esybox

ESYBOX is DAB's integrated system for pressurization in domestic and residential applications.
ESYBOX does not require any additional components for installation. It consists of a self-priming multistage pump, electronic inverter management, flow and pressure sensors, high-resolution swivel LCD display and an integrated 0.5 gal (2 ltr)expansion tank. It can be installed both vertically and horizontally and even in tight spaces without a high air exchange.
The water-cooled motor, the hull protection in ABS with sound-absorbing function, the vibration damping feet and electronics make it an absolutely quiet (**43 dB**) and compact.
The wireless capabilities facilitates the creation of pressurization units and connectivity with other DAB devices.

Degree of protection IP X 4

Insulation class F

Pumped liquid clean, free from solids or abrasive, non-aggressive, non-viscous, crystallized and not chemically neutral.

Maximum liquid temperature 104°F (40°C)

Maximum ambient temperature 122°F (50°C)

Maximum suction depth
self priming up to 26 ft (8 m)

Maximum working pressure 116 psi (8 Bar)

WRAS APPROVED PRODUCT · ACS · iF product design award 2013 · NSF · C SP US

D+ CONNECT PAG. 5 · ACCESSORIES PAG. 18 - 31

TECHNICAL DATA

MODEL	CODE
ESYBOX - NPT US PLUG	60161182

ELECTRICAL DATA				HYDRAULIC DATA													
VOLTAGE 50 - 60 Hz	P1 MAX		I MAX A	Q=GPM	0	2.6	5.3	7.9	10.6	13.2	15.8	18.5	21.1	23.8	26.4	29	31.7
	kW	HP		Q=l/min	0	10	20	30	40	50	60	70	80	90	100	110	120
1x220-240 V ~	1.55	2.1	10	H (ft)	213	208	202	195	187	174	157	136	115	90	62	33	7
				H (m)	65	63.5	61.5	595	57	53	48	41.5	35	27.5	19	10	2

APPLICATIONS





Esybox

Houses and small apartment complexes up to 6 floors and a maximum of 9 apartments.

Esytwin

Small and large apartment complexes up to 9 floors and a maximum of 17 apartments.

SUITABLE FOR PUMPING WATER FROM:



WELLS DOWN TO 26 FT (8 M) DEEP



RAINWATER COLLECTION TANKS



TANKS



MUNICIPAL WATER SUPPLY WHERE PERMITTED BY LAW



esygrid

INSECT GRILLS

discover esybox LINE
https://esyboxline.com

ESYBOX

ELECTRONIC PRESSURIZATION SYSTEM

RANGE PERFORMANCE

ESYBOX

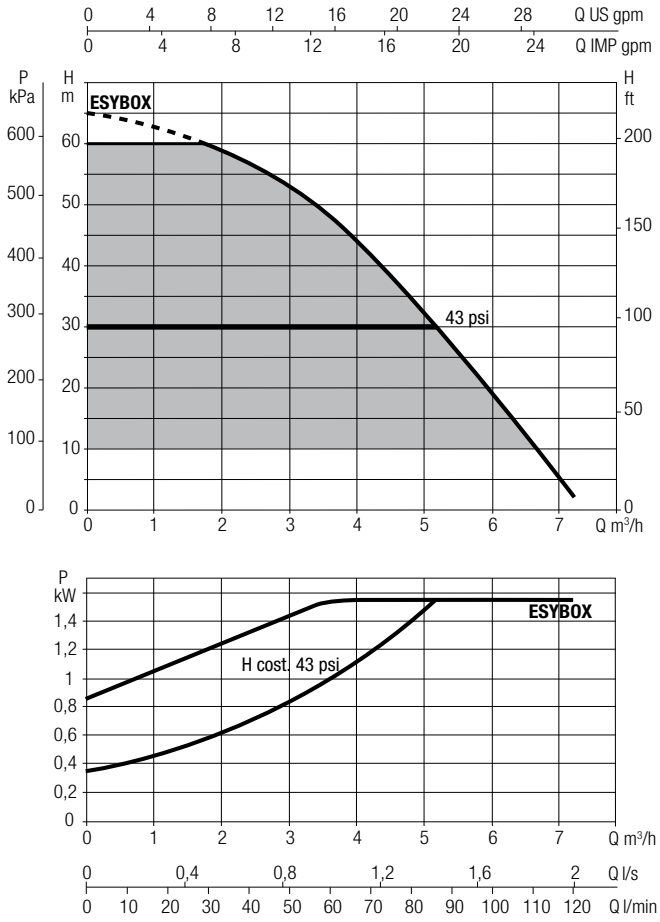

ESYBOX TWIN

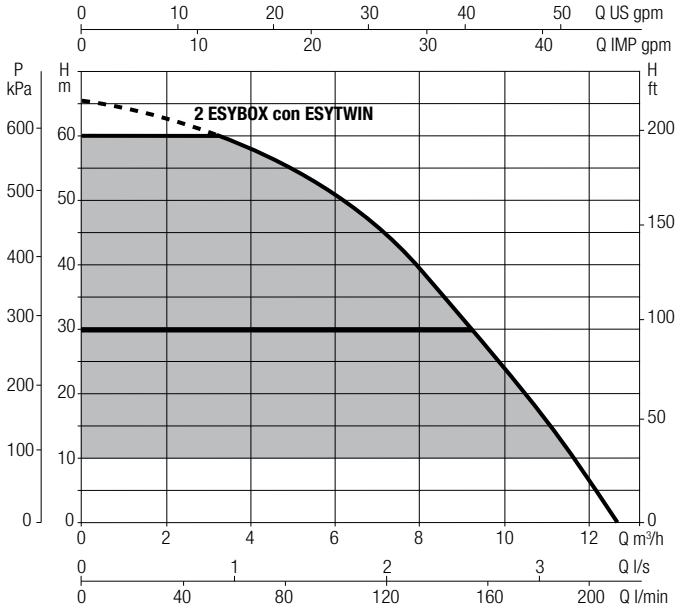

DIMENSIONS AND WEIGHTS

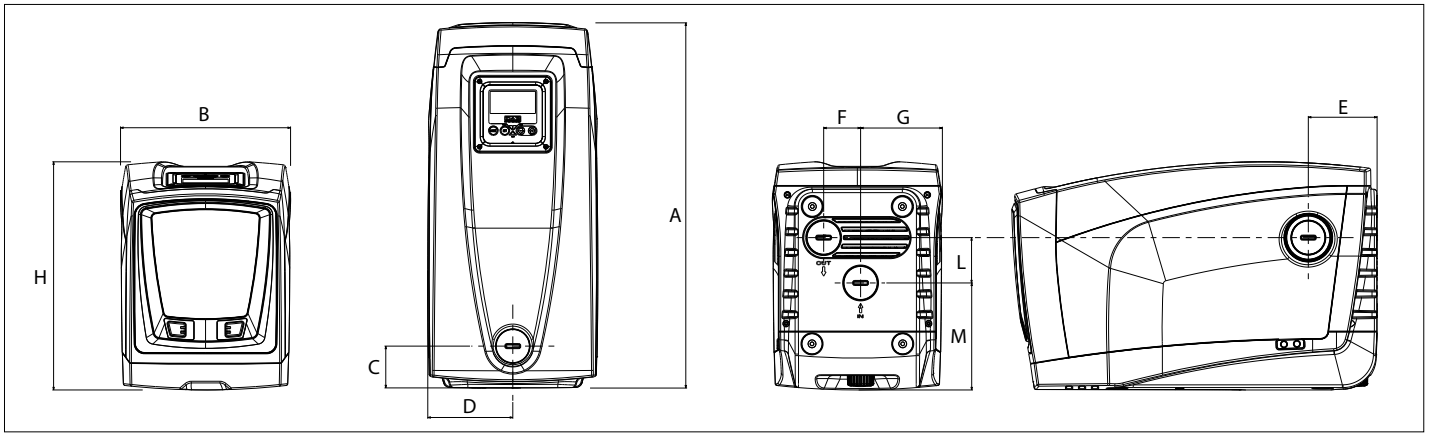

MODEL	UNITS	A	B	C	D	E	F	G	H	L	M	DNA F NPT	DNM F NPT	PACKING DIMENSIONS			WEIGHT	Q.TY x PALLET
														L/A	L/B	H		
ESYBOX - NPT	inches	22.2	10.4	2.6	5.2	4.2	2.2	5	14.3	2.8	6.5	1"	1"	27	14.2	19.3	59.5 lbs	6
	mm	564	263	65	131.5	106	57	126.2	362	70	165.2			685	360	490	27 Kg	

DAB PUMPS reserves the right to make modifications without notice

ESYBOX - ACCESSORIES

ELECTRONIC PRESSURIZATION SYSTEM

	DESCRIPTION	CODE
	**DCONNECT BOX 2** Thanks to DConnect Box 2 and the new App you can check the pump, set the starting and stopping parameters, view the details of alarms and monitor the status of the system directly on your smartphone. (Only for DTron 3 and ESYBOX LINE products, included with Esybox Diver).	60198035 NEMA 5 PLUG to 120v NEMA 5/15P 60198037 NEMA 6 PLUG to 230v NEMA 6/15P
 C US Drinking Water NSF/ANSI 61 7.1 x 11.4 x 12.6 in	**ESYDOCK** Thanks to the 4 plumbing configuration possibilities offers an installation even more rapid, easy and flexible. It is complete with all the fittings required for connecting to the system. It incorporates anti vibration feet to ensure the same quietness as Esybox.	60150514
 C US Drinking Water NSF/ANSI 61 9.1 x 29.5 x 13.8 in	**ESYTWIN** Esytwin is the evolution of Esydock, of which maintains all the benefits, for the creation of two groups of pumps. Esytwin offers exceptional performance thanks to possibility of combined operation with a reduced size of 50% compared to any other equivalent traditional system.	60162081
	**KIT ESYLINK** Esylink with power supply and enclosure	60164735



DELIVERY AND SUCTION FITTING 1" ¼



26.8 x 11.4 x 13.8 in
68 x 29 x 35 cm



KIT DIMENSIONS
28.7 x 29.5 x 13.8 in
73 x 75 x 35 cm

ESYBOX DIVER

7" MULTISTAGE SUBMERSIBLE PUMPS WITH VARIABLE FREQUENCY DRIVE



esybox DIVER

7" multi-stage electronic pump with variable frequency drive for clean water designed for use in wells, tanks or cisterns. The pump can be used submerged, partially submerged or on the surface (with the DOC68 accessory, supplied separately). The pump is suitable for pressurization, rainwater re-use and gardening and irrigation activities in residential building service.
The pump integrates the variable frequency drive for operation according to the system requirements a non-return valve and a stainless steel handle for transport.
The electronic operation also protects against dry running and the VFD saves energy.
The suction height is adjustable from the bottom up to 3.1 in (8 cm) It is possible to connect a float and a level sensor without opening the pump maintaining a water-tight seal thanks to the NFC (Near Field Communication) pocket. Equipped with expansion tank making the use of an additional expansion tank superfluous.
Wi-Fi connectivity as standard.
The DConnect Box 2 is included, by downloading the DConnect app for Android or iOS you can control the pump from your smartphone.
The pump is available in X version with 1" inlet and X kit which can be connected to a suction hose and float to prevent the suction of impurities from the bottom. The whole pump is IP 68 certified, it can be used on the surface (with flooded suction).
If combined with an identical pump, two pumps can operate in alternate or simultaneous mode.

Flow rate maximum 31.7 GPM (7.2 m^3/h)
Head up to 180 ft (55 m)
Maximum immersion depth
39 ft (12 m) standard version
Type of pumped liquid clean, free from solid or abrasive substances, non-viscous, non-aggressive, non-crystallized and chemically neutral.
Free passage 0.1 in (2 mm)
Liquid temperature range from
+32°F to +122°F (0°C to +50°C)
Set cut-in 35 psi (+-3) 2.4 bar (+-0.2)
Outlet connection thread 1" 1/4
Pump maximum diameter 7.3 in (185 mm)
Protection class IP 68
Motor insulation class F
Power cable and plug 49 ft (15 m) with plug
Possible type of installation fixed, horizontal or vertical. Submerged or semi-submerged. It can be installed on the surface, under the water level, or outside in a vertical position with the DOC68 accessory (supplied separately).

D+ CONNECT PAG. 5 ACCESSORIES PAG. 21

TECHNICAL DATA

MODEL	CODE
ESYBOX DIVER	60197922
ESYBOX DIVER X	60202768

ELECTRICAL DATA					HYDRAULIC DATA												
VOLTAGE	P1 MAX kW	P2 NOMINAL kW	P2 NOMINAL HP	In A	Q=GPM	0	2.6	5.3	7.9	10.6	13.2	15.8	18.5	21.1	23.8	26.4	29	31
					Q=l/min	0	10	20	30	40	50	60	70	80	90	100	110	117
1 x 220-240 V ~	1.3	0.95	1.3	5.5	H (ft)	180	180	180	180	180	180	174	144	112	85	56	25	2.1
					H (m)	55	55	55	55	55	55	53	44	34	26	17	7.5	0.64
1 x 220-240 V ~	1.3	0.95	1.3	5.5	H (ft)	180	180	180	180	180	180	174	144	112	85	56	25	2.1
					H (m)	55	55	55	55	55	55	53	44	34	26	17	7.5	0.64

APPLICATIONS



Esybox Diver

Houses and small residential buildings up to 6 floors and a maximum of 9 apartments.*

*Indicative data. Please refer to the technical catalogue or DNA for correct sizing.

SUITABLE FOR PUMPING WATER FROM:



TANKS

RAINWATER COLLECTION TANKS

WELLS DOWN TO 26 FT (8 M) DEEP

ESYBOX DIVER

7” MULTISTAGE SUBMERSIBLE PUMPS WITH VARIABLE FREQUENCY DRIVE

RANGE PERFORMANCE

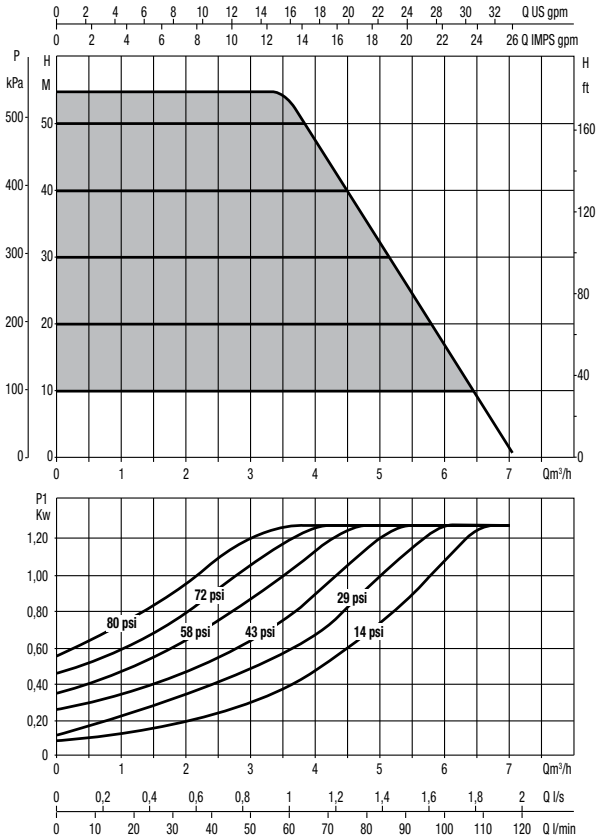

DIMENSIONS

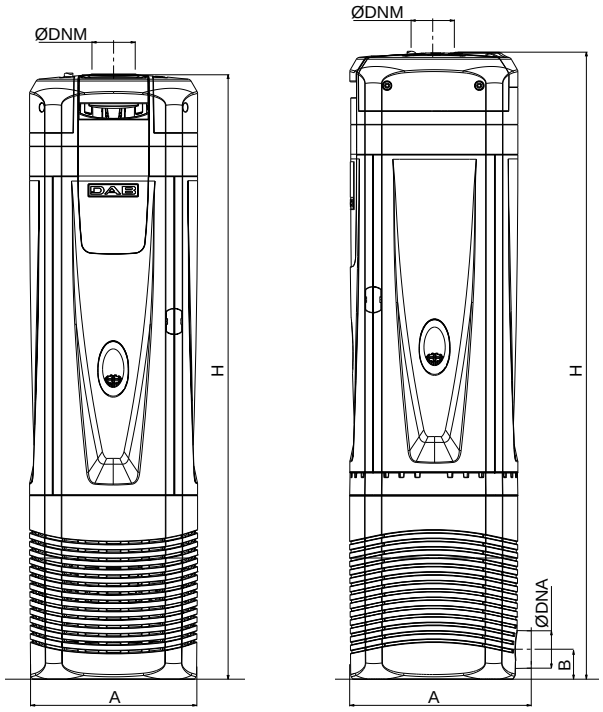

ESYBOX DIVER **ESYBOX DIVER X**

DIMENSIONS AND WEIGHTS

MODEL	Units	A	B	H	Ø DNM NPT	Ø DNA NPT	PACKING DIMENSIONS			PACKING VOLUME	Q.TY X PALLET	WEIGHT
							L/A	L/B	H			
ESYBOX DIVER	Inches	7.3	-	25.6	1" 1/4	-	29.1	9.1	11.8	1.8 ft³	15	37.5 lbs
	mm	185	-	651			740	230	300	0.05106 m³		17 Kg
ESYBOX DIVER X	Inches	7.7	1.3	26.6	1" 1/4	1“	30.7	9.1	11.8	1.9 ft³	15	37.5 lbs
	mm	195	32	676			780	230	300	0.0538 m³		17 Kg

ESYBOX DIVER - ACCESSORIES

SUBMERSIBLE PUMPS AND SUBMERSIBLE MOTORS

	DESCRIPTION	CODE
	**DCONNECT BOX 2** Thanks to DConnect Box 2 and the new App you can check the pump, set the starting and stopping parameters, view the details of alarms and monitor the status of the system directly on your smartphone. (Only for DTron 3 and ESYBOX LINE products, included with Esybox Diver).	60198035 NEMA 5 PLUG to 120v NEMA 5/15P 60198037 NEMA 6 PLUG to 230v NEMA 6/15P
	**NFC WATER LEVEL MEASUREMENT** Only connected to the DConnect Box 2, controls the level of water in the tank and notifies the user of the level via an App. (Only for DTron 3 and Esybox diver).	60184570
	**NFC FLOAT** Detects the level of water in a tank, preventing emptying of the latter and seizing of the pump avoiding the dry running, due to too low a level of water.	60184577
	**DOC68** The DOC68 permits installation of the DTron and Esybox Diver even outdoors as an IP68 certified surface pump.	60192276

ESYBOX MAX

ELECTRONIC BOOSTER SET

NEW



esybox max

Integrated pumping system for water pressurization in commercial building service. Available in two power sizes, the system is composed of **modular elements** that allow different configurations: single, double, triple or quadruple unit are possible, to cover the needs of medium/large condominiums and high buildings (even over 14 floors). Each unit consists of the hydraulic connection base and the pumping unit which includes an electronic vertical multi-impeller pump, display, Wi-Fi module, pressure sensors, non-return valve on delivery and an expansion tank, **all integrated**.
The innovative support base of the pumping unit and the wireless communication between the pumps make it possible to **assemble the unit directly at the installation site (O.S.A. concept)** even by one person. The variable frequency drive keeps the pressure constant by varying the frequency of the motor according to the request and also thanks to the water-cooled permanent magnet motor it allows greater efficiency and energy savings. The large display allows easy configuration of the operating parameters with the possibility of viewing them from a smartphone (via the DConnect APP) or remotely via the DConnect service. The expansion module (esy I / O, available as an accessory) gives the possibility to interface Esybox max with the BMS.

Flow rate up to 76.6 gpm 17.4 m³/h (single pump unit)
Head 371 ft (113 m)
Type of pumped liquid clean, free from solid or abrasive substances, non-viscous, non-aggressive, non-crystallized and chemically neutral
Liquid temperature +33.8°F (50°C)
Maximum room temperature +131°F (55°C)
Maximum inlet pressure 73 psi (5 Bar)
Nominal pressure (PN) 174 psi (12 Bar)
Constant pressure range
15-174 psi (44 psi by default)
1-12 bar (3 bar by default)
Motor protection class IP X5
Motor insulation class F
Impeller material technopolymer
Single phase power input 208-240 V 50/60 Hz
Three phase power input 380-480 V 50/60 Hz
Type of installation fixed in vertical position
Certification Approved to NSF61, NSF 372, CSA & UL

WRAS, ACS are pending approval

OSA ON SITE ASSEMBLY | WRAS APPROVED PRODUCT | ACS | NSF | C US | DESIGN AWARD 2021 | D+ CONNECT BUILT-IN

PAG. 5 ACCESSORIES PAG. 31

TECHNICAL DATA

MODEL (only pump unit)	CODE	ELECTRICAL DATA						DNA NPT	DNM NPT	WEIGHT	Q.TY x PALLET
		N° IMPELLERS	VOLTAGE 50 - 60 Hz	P1 MAX kW	P1 MAX HP	In A	SET POINT				
ESYBOX MAX 60/120 M CSA	60207561	3	1x208-240 V ~	2.68	3.6	12.5 -11.5	1-12	1"1/4 / 2"	1"1/4 / 2"	63.9 lbs / 29 kg	6
ESYBOX MAX 60/120 T CSA	60207560	3	3x380-480 V ~	2.65	3.5	4.4	1-12	1"1/4 / 2"	1"1/4 / 2"	63.9 lbs / 29 kg	6
ESYBOX MAX 85/120 T CSA	60207559	4	3x380-480 V ~	3.50	4.7	5.6	1-12	1"1/4 / 2"	1"1/4 / 2"	66.1 kbs / 30 kg	6

MODEL	CODE	WEIGHT	Q.TY x PALLET
ESYDOCK MAX NPT	60199045	19.8 lbs / 9 Kg	12
2 ESYDOCK MAX NPT	60199055	39.7 lbs / 18 Kg	6
3 ESYDOCK MAX NPT	60199056	59.5 lbs / 27 Kg	3



APPLICATIONS



CONDOMINUM
Example: 10 floors
20 apartments

HOTEL
Example: 6 floors
80 Rooms

HOSPITAL
Example: 4 floors
100 Beds

*Indicative data. Please refer to the technical catalogue or DNA for correct sizing.

SUITABLE FOR PUMPING WATER FROM:

NO SELF-PRIMING



TANKS

MUNICIPAL WATER SUPPLY
where permitted by law

discover

https://esyboxline.com

ESYBOX MAX
ELECTRONIC BOOSTER SET

Efficiency at the state of the art

The DAB inverter has been combined with a brand new permanent magnet motor. We also designed completely new hydraulics, making it leap ahead in terms of energy efficiency.

20%
Energy Saving

What about logistics

Esybox Max will improve the storage efficiency in your warehouse.
Where there was once one booster occupying space, you can now fit three in its place, that's three times more efficient!
This allows you to store the full range on one pallet, meaning your customer can pick up an off the shelf booster solution of up to 4 pumps the same day.

That's efficient!



1 PIECE OF 2KVC AD



6 PIECES OF ESYBOX MAX
+
3 PIECES OF 2ESYDOCK MAX







As quick as a "click"

Install Esydock into your pipework system and simply "plug" your pumps in. A final quick set up via the digital DConnect app completes your installation project.



ESYBOX MAX
ELECTRONIC BOOSTER SET

OSA
ON SITE ASSEMBLY

Easy to move & install

Keeping it flexible, we have the On-Site Assembly concept. So if you have difficulties getting to the pumps location, due to narrow stairways and corridors etc, you can choose to assemble your booster on-site which will only require moving smaller lighter boxes into the location then carry out our quick assembly steps.



D+ CONNECT

Affordable web based remote control for your installation

You can use your smartphone to connect directly with the pump using the simple interface. It will automatically detect the language, time and unit of measurement at the installation site, which will save you time during the first set up of the system.

All adjustments are possible remotely allowing total control with no unwanted surprises.
DConnect makes monitoring DAB products easy and intuitive.



D+ CONNECT
BUILT-IN

ANDROID APP ON Google play

Download on the App Store

ESYBOX MAX

ELECTRONIC BOOSTER SET

CONFIGURATION TABLE

GROUP TOTAL (PUMP UNIT + DOCK)	PUMP UNIT			DOCK		
	MODEL	CODE	Q.TY PUMP UNIT	MODEL	CODE	Q.TY DOCK
 esybox max	**ESYBOX MAX 60/120 M**	60199039	**1 PUMP UNIT** 	**ESYDOCK MAX**	60199045	**1 DOCK** 
	ESYBOX MAX 60/120 T	60199035				
	ESYBOX MAX 85/120 T	60195100				
 2 esybox max *	**ESYBOX MAX 60/120 M**	60199039	**2 PUMP UNITS** 	**2 ESYDOCK MAX**	60199055	**1 DOCK** 
	ESYBOX MAX 60/120 T	60199035				
	ESYBOX MAX 85/120 T	60195100				
 3 esybox max	**ESYBOX MAX 60/120 M**	60199039	**3 PUMP UNITS** 	**3 ESYDOCK MAX**	60199056	**1 DOCK** 
	ESYBOX MAX 60/120 T	60199035				
	ESYBOX MAX 85/120 T	60195100				

* With 2 Units of 2 Esybox Max with the JOINT KIT you obtain the 4 pump units group.

DIMENSIONS (PUMP UNIT + DOCK) **30.3 x 15 x 15 in** **77 x 38 x 38 cm**

SOUND PRESSURE** **63** **db(A)**



DIMENSIONS (ONLY DOCK) **9.1 x 15 x 15 in** **23 x 38 x 38 cm**

esybox max

DIMENSIONS (PUMP UNIT + DOCK) **30.3 x 31.9 x 15 in** **77 x 81 x 38 cm**



DIMENSIONS (ONLY DOCK) **9.1 x 31.9 x 15 in** **23 x 81 x 38 cm**

2 esybox max *

DIMENSIONS (PUMP UNIT + DOCK) **30.3 x 49.2 x 15 in** **77 x 125 x 38 cm**



DIMENSIONS (ONLY DOCK) **9.1 x 49.2 x 15 in** **23 x 125 x 38 cm**

3 esybox max *

* To configure the 2/3/4 Esybox Max version you can combine the control panel and the pillar kit to facilitate the electrical sectioning of the pumps.

** Sound pressure measured at 3 ft (1 m) distance in free field. 13.2 gpm (50 l/min) and 87 psi (6 Bar).

DAB PUMPS reserves the right to make modifications without notice

ESYBOX MAX

ELECTRONIC BOOSTER SET

RANGE PERFORMANCE

MODEL	Q=gpm	0	10.6	15.8	21.1	26.4	31.7	37	42.2	47.5	55.4	63.4	76.6
	Q=l/min	0	40	60	80	100	120	140	160	180	200	220	240
ESYBOX MAX 60/120 M	H (ft)	262	261	253	241	225	203	182	158	135	100	69	13
	H (m)	80	79.5	77.1	73.4	68.5	62	55.5	48.2	41	30.5	21	4
ESYBOX MAX 60/120 T	H (ft)	262	261	253	241	225	203	182	158	135	100	69	13
	H (m)	80	79.5	77.1	73.4	68.5	62	55.5	48.2	41	30.5	21	4
ESYBOX MAX 85/120 T	H (ft)	371	361	349	331	305	276	246	215	186	143	102	28
	H (m)	113	110	106.5	101	93	84	75	65.5	56.7	43.5	31	8.5

MODEL	Q=gpm	0	21.1	31.7	42.2	55.4	76.6	73.9	84.5	95	110.9	126.7	153.1
	Q=l/min	0	80	120	160	200	240	280	320	360	420	480	580
2 ESYBOX MAX 60/120 M	H (ft)	262	261	253	241	225	203	182	158	135	100	69	13
	H (m)	80	79.5	77.1	73.4	68.5	62	55.5	48.2	41	30.5	21	4
2 ESYBOX MAX 60/120 T	H (ft)	262	261	253	241	225	203	182	158	135	100	69	13
	H (m)	80	79.5	77.1	73.4	68.5	62	55.5	48.2	41	30.5	21	4
2 ESYBOX MAX 85/120 T	H (ft)	371	361	349	331	305	276	246	215	186	143	102	28
	H (m)	113	110	106.5	101	93	84	75	65.5	56.7	43.5	31	8.5

MODEL	Q=gpm	0	31.7	47.5	63.4	79.2	95	110.9	126.7	142.6	166.3	190.1	229.7
	Q=l/min	0	120	180	240	300	360	420	480	540	630	720	870
3 ESYBOX MAX 60/120 M	H (ft)	262	261	253	241	225	203	182	158	135	100	69	13
	H (m)	80	79.5	77.1	73.4	68.5	62	55.5	48.2	41	30.5	21	4
3 ESYBOX MAX 60/120 T	H (ft)	262	261	253	241	225	203	182	158	135	100	69	13
	H (m)	80	79.5	77.1	73.4	68.5	62	55.5	48.2	41	30.5	21	4
3 ESYBOX MAX 85/120 T	H (ft)	371	361	349	331	305	276	246	215	186	143	102	28
	H (m)	113	110	106.5	101	93	84	75	65.5	56.7	43.5	31	8.5

MODEL	Q=gpm	0	42.2	63.4	84.5	105.6	126.7	147,8	169	190.1	221.8	253.4	306.2
	Q=l/min	0	160	240	320	400	480	560	640	720	840	960	1160
4 ESYBOX MAX 60/120 M	H (ft)	262	261	253	241	225	203	182	158	135	100	69	13
	H (m)	80	79.5	77.1	73.4	68.5	62	55.5	48.2	41	30.5	21	4
4 ESYBOX MAX 60/120 T	H (ft)	262	261	253	241	225	203	182	158	135	100	69	13
	H (m)	80	79.5	77.1	73.4	68.5	62	55.5	48.2	41	30.5	21	4
4 ESYBOX MAX 85/120 T	H (ft)	371	361	349	331	305	276	246	215	186	143	102	28
	H (m)	113	110	106.5	101	93	84	75	65.5	56.7	43.5	31	8.5

ESYBOX MAX

ELECTRONIC BOOSTER SET

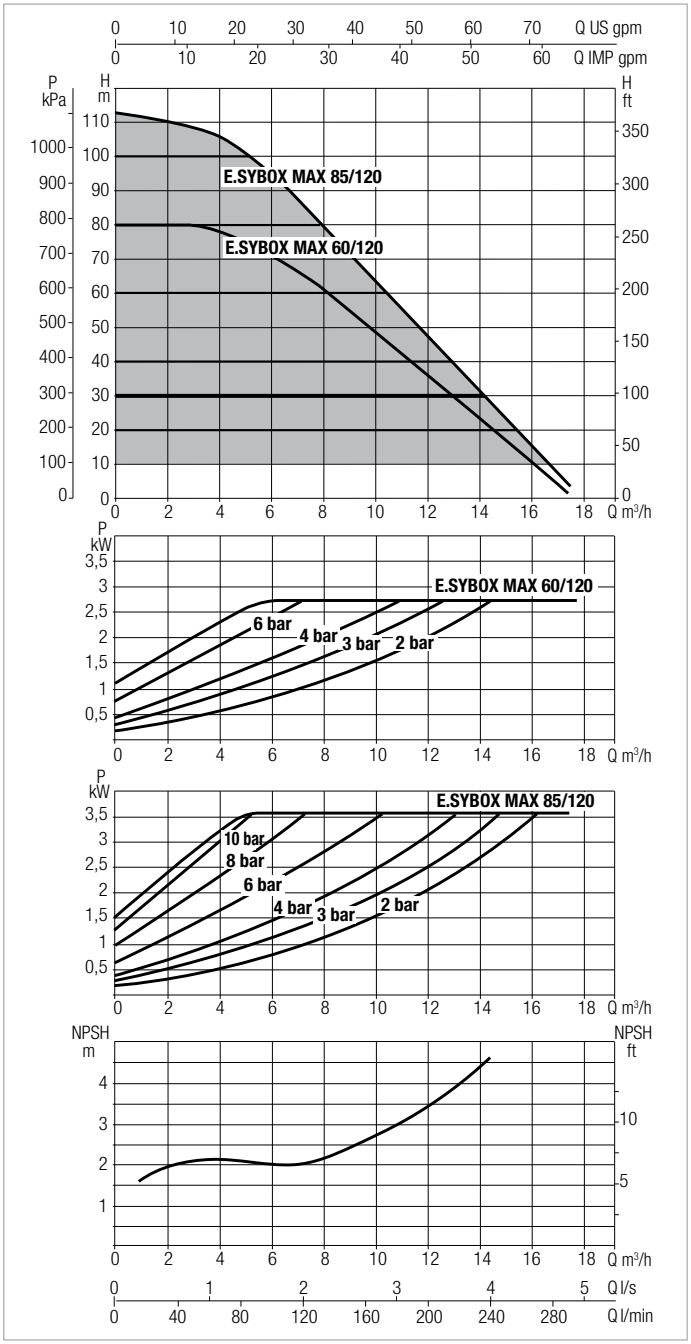

Curve tolerance according to ISO 9906.

DIMENSIONS

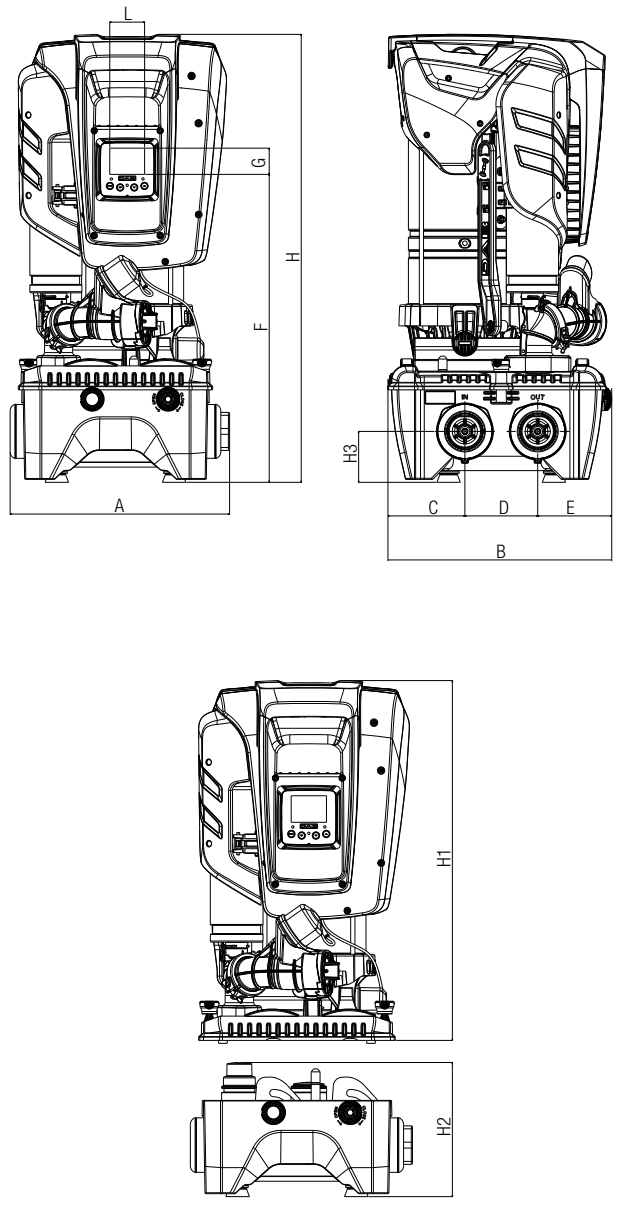

DIMENSIONS AND WEIGHTS

MODEL	units	A	B	C	D	E	F	G	H	H1	H2	H3	L	DNA	DNM	PACKING DIMENSIONS* PUMP UNIT L/A	PACKING DIMENSIONS* PUMP UNIT L/B	PACKING DIMENSIONS* PUMP UNIT H	WEIGHT* PUMP UNIT lbs	PACKING DIMENSIONS DOCK L/A	PACKING DIMENSIONS DOCK L/B	PACKING DIMENSIONS DOCK H	WEIGHT DOCK
ESYBOX MAX 60/120	inches	14.8	15.1	5.2	4.9	5	20.7	1.8	30.2	24.1	9	3.4	2.3	1"1/4 - 2"	1"1/4 - 2"	15.7	15	31.5	63.9 lbs	15.7	15.7	9.8	19.8 lbs
	mm	375	384	131.8	124.5	127.7	526	45	766	613	228	87	59.5			400	380	800	29 Kg	400	400	250	9 Kg
ESYBOX MAX 85/120	inches	14.8	15.1	5.2	4.9	5	20.7	1.8	30.2	24.1	9	3.4	2.3	1"1/4 - 2"	1"1/4 - 2"	15.7	15	31.5	66.1 lbs	15.7	15.7	9.8	19.8 lbs
	mm	375	384	131.8	124.5	127.7	526	45	766	613	228	87	59.5			400	380	800	30 Kg	400	400	250	9 Kg

* Weights and packaging dimensions refer to a pump unit

ESYBOX MAX

ELECTRONIC BOOSTER SET

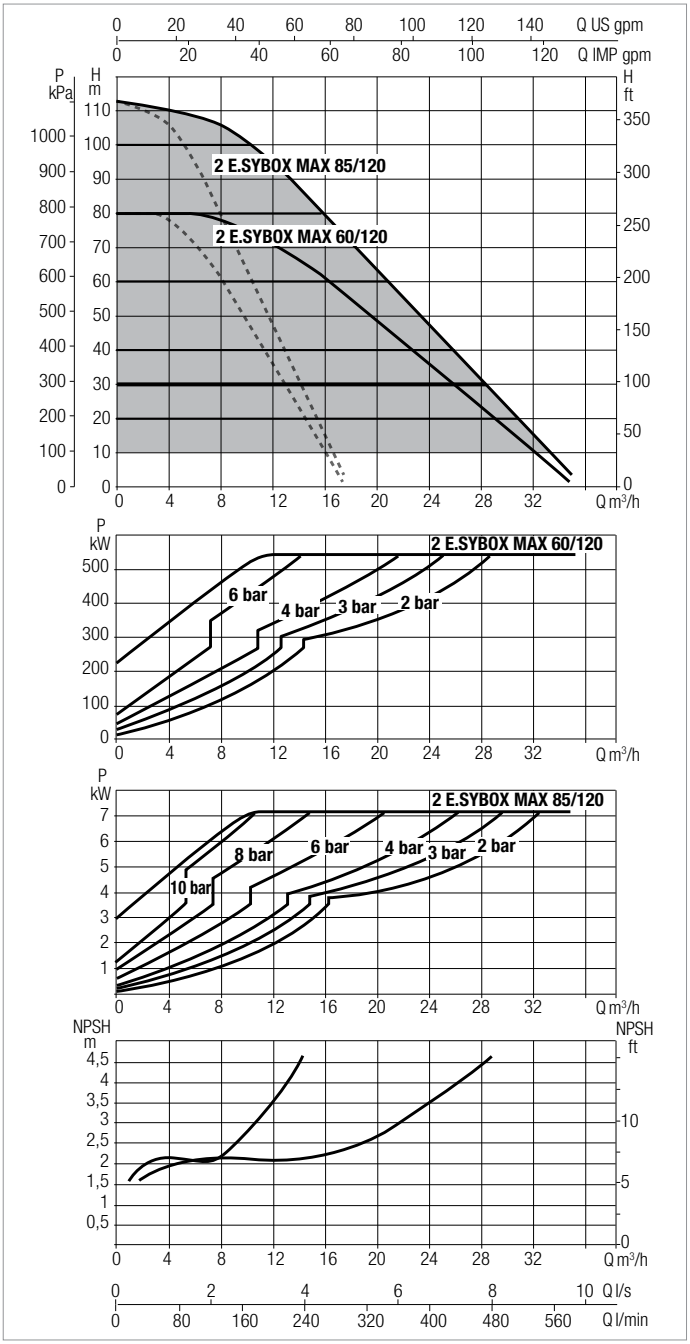

DIMENSIONS

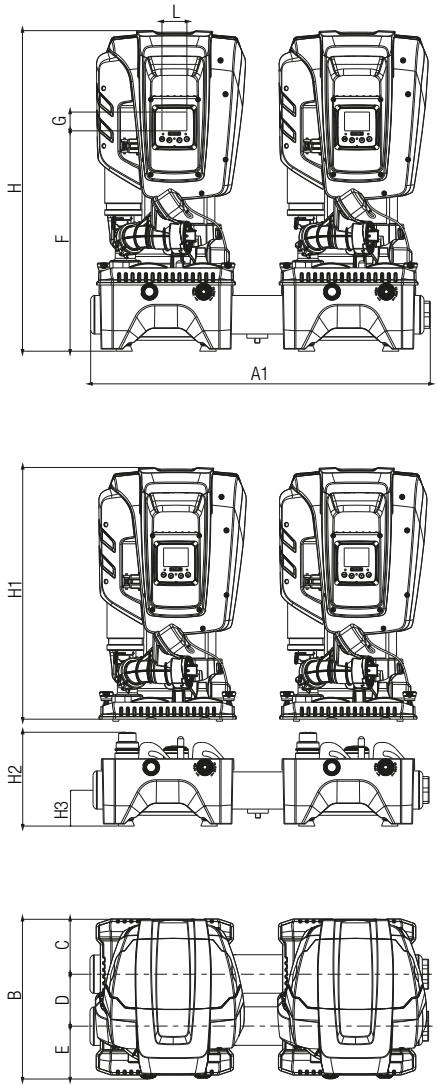

Curve tolerance according to ISO 9906.
For the four pumps version, the flow rate is the double.

DIMENSIONS AND WEIGHTS

MODEL	units	A1	B	C	D	E	F	G	H	H1	H2	H3	L	DNA	DNM	PACKING DIMENSIONS* PUMP UNIT L/A	PACKING DIMENSIONS* PUMP UNIT L/B	PACKING DIMENSIONS* PUMP UNIT H	WEIGHT* PUMP UNIT	PACKING DIMENSIONS DOCK L/A	PACKING DIMENSIONS DOCK L/B	PACKING DIMENSIONS DOCK H	WEIGHT DOCK
2 ESYBOX MAX 60/120	inches	31.9	15.1	5.2	4.9	5	20.7	1.8	30.2	24.1	9	3.4	2.3	2"	2"	15.7	15	31.5	63.9 lbs	35.4	15.7	9.8	39.7 lbs
	mm	811	384	131.8	124.5	127.7	526	45	766	613	228	87	59.5			400	380	800	29 Kg	900	400	250	18 Kg
2 ESYBOX MAX 85/120	inches	31.9	15.1	5.2	4.9	5	20.7	1.8	30.2	24.1	9	3.4	2.3	2"	2"	15.7	15	31.5	66.1 lbs	35.4	15.7	9.8	39.7 lbs
	mm	811	384	131.8	124.5	127.7	526	45	766	613	228	87	59.5			400	380	800	30 Kg	900	400	250	18 Kg

* Weights and packaging dimensions refer to a pump unit **Control panel and Mounting bracket sold separately as optional accessories

ESYBOX MAX

ELECTRONIC BOOSTER SET

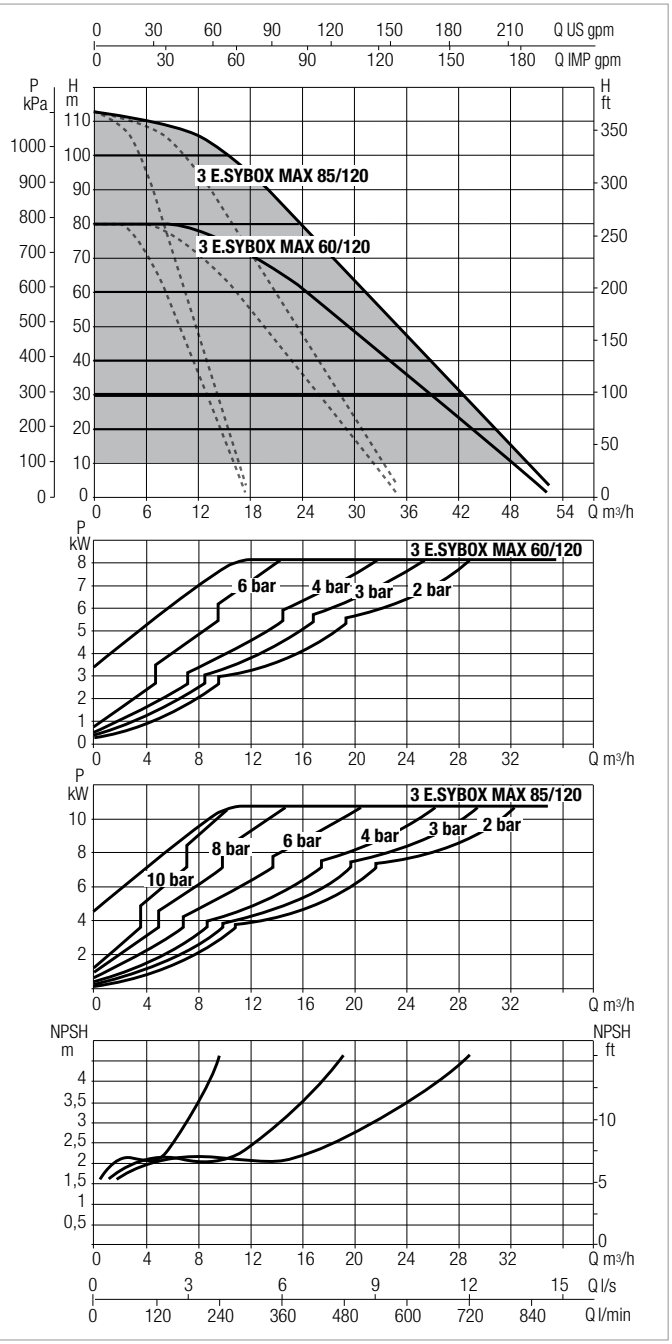

DIMENSIONS

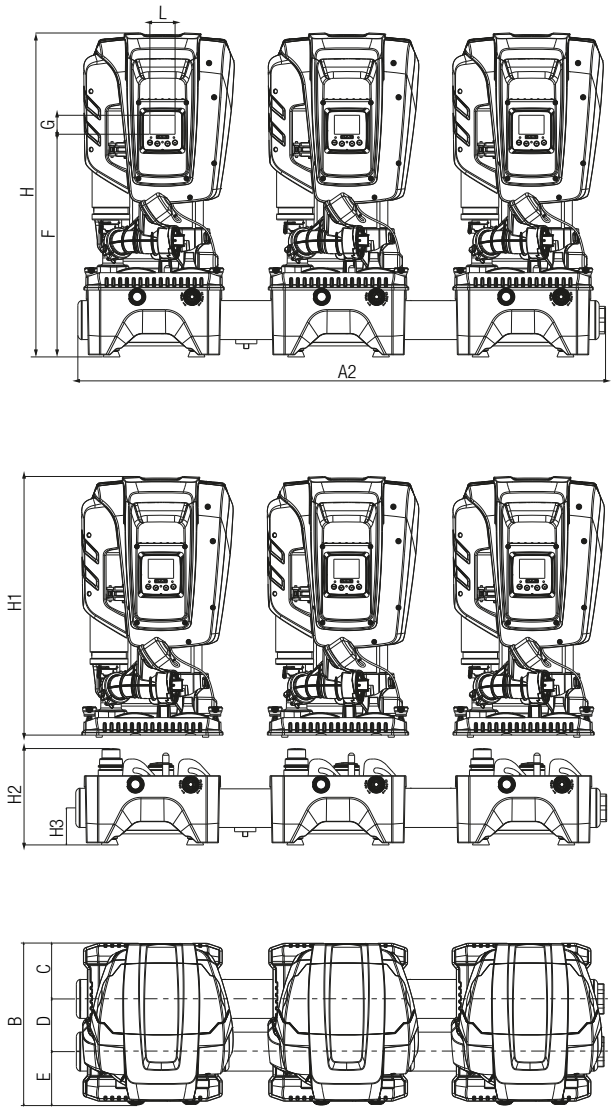

Curve tolerance according to ISO 9906.

DIMENSIONS AND WEIGHTS

MODEL	units	A2	B	C	D	E	F	G	H	H1	H2	H3	L	DNA	DNM	PACKING DIMENSIONS* PUMP UNIT L/A	PACKING DIMENSIONS* PUMP UNIT L/B	PACKING DIMENSIONS* PUMP UNIT H	WEIGHT* PUMP UNIT	PACKING DIMENSIONS DOCK L/A	PACKING DIMENSIONS DOCK L/B	PACKING DIMENSIONS DOCK H	WEIGHT DOCK
3 ESYBOX MAX 60/120	inches	49.2	15.1	5.2	4.9	5	20.7	1.8	30.2	24.1	9	3.4	2.3	2"	2"	15.7	15	31.5	63.9 lbs	49.2	15.7	9.8	59.5 lbs
	mm	811	384	131.8	124.5	127.7	526	45	766	613	228	87	59.5			400	380	800	29 Kg	1250	400	250	27 Kg
3 ESYBOX MAX 85/120	inches	49.2	15.1	5.2	4.9	5	20.7	1.8	30.2	24.1	9	3.4	2.3	2"	2"	15.7	15	31.5	66.1 lbs	49.2	15.7	9.8	27 lbs
	mm	811	384	131.8	124.5	127.7	526	45	766	613	228	87	59.5			400	380	800	30 Kg	1250	400	250	59.5 Kg

* Weights and packaging dimensions refer to a pump unit **Control panel and Mounting bracket sold separately as optional accessories

NOTES

ACCESSORIES ESYBOX LINE

ESYBOX - ACCESSORIES

ELECTRONIC PRESSURIZATION SYSTEM

	DESCRIPTION	CODE
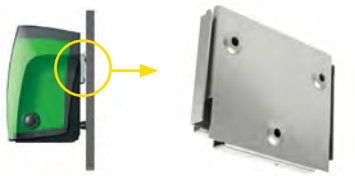 ALSO SUITABLE FOR ESYBOX MINI³	**ESYWALL** Kit complete with brackets, screws, dowels and two anti-vibration feet for absorption of vibrations.	60161442

KIT OUTDOOR	MODEL	CODE
 FOR ESYBOX	**ESYCOVER** **KIT OUTDOOR ESYBOX** Esycover allows the installation of ESYBOX outside, protecting it from rain. **Vertical installation only.**	60203667
 FOR ESYBOX MINI³	**ESYCOVER** **KIT OUTDOOR ESYBOX MINI³** Esycover allows the installation of ESYBOX MINI³ outside, protecting it from rain. **Vertical installation only.**	60203671

ESYCOVER

OUTSIDE INSTALLATION

Suitable for Esybox mini³.



ESYCOVER

OUTSIDE INSTALLATION

Suitable for Esybox.



ESYBOX MAX - ACCESSORIES

ELECTRONIC BOOSTER SET

	DESCRIPTION	CODE	ESYBOX MAX	2 ESYBOX MAX	3 ESYBOX MAX	4 ESYBOX MAX
	**ESY I/O** The electronic expansion module allows Esybox Max to interface with the external input/output devices (eg: float switch, pressure switch, remote alarm) and with the BMS world (Building Management System).	60200914	•	•	•	•

NOTES

INDEX - CENTRIFUGAL & JET



JETCOM - JET
SELF-PRIMING CENTRIFUGAL PUMPS
PAGE 36



EUROINOX
MULTISTAGE CENTRIFUGAL PUMPS
PAGE 49



JET PRESSURE SWITCH
CENTRIFUGAL PUMPS FITTED
PAGE 41



K
SINGLE IMPELLER CENTRIFUGAL PUMPS
PAGE 52



EI BOOSTER
MULTISTAGE CENTRIFUGAL PUMPS
PAGE 42



K
TWIN IMPELLERS CENTRIFUGAL PUMPS
PAGE 55



JETSS
SELF-PRIMING CENTRIFUGAL PUMPS
PAGE 45



DP
PUMPS FOR DEEP SUCTION
PAGE 58



JETSS PRESSURE SWITCH
CENTRIFUGAL PUMPS FITTED
PAGE 48

JETCOM - JET

SELF-PRIMING CENTRIFUGAL PUMPS


JETCOM


JET


JET 150-250

Self-priming centrifugal pump with excellent suction capacity even when there are air bubbles. Particularly suitable for water supply in domestic installations, small-scale agriculture, gardening and wherever self- priming operation is necessary.
Jetcom: technopolymer pump body.
Jet: cast iron pump body.
Motor support in cast iron, technopolymer impeller, diffuser, Venturi tube and sand guard. Stainless steel adjustment rings.
Carbon/ceramic mechanical seal. Asynchronous motor closed and cooled by external ventilation.
Built-in thermal and current overload protection and a capacitor permanently on in the single-phase version. For the protection of the three-phase motor it is advisable to use a suitable overload protection complying with the regulations in force.

Operating range from 1.8 to 46.2gpm (0.4 to 10.5 m^3/h) with head up to 203 ft (62 m)

Liquid temperature range
from 32°F to +95°F (0°c to +35°C) for domestic use
from 32°F to +104°F (0°C to +40°C) for other use

Pumped liquid characteristics clean, free from solids or abrasive substances, non-viscous, non-aggressive, non-crystallised and chemically neutral.

Maximum ambient temperature +104°F (40°C)

Maximum working pressure
87 psi (6 bar) for Jetcom and Jet

Protection level
IP 44 (IP 55 terminal board protection)

Insulation class F

TECHNICAL DATA - *JETCOM*

MODEL	CODE	ELECTRICAL DATA						
		VOLTAGE 60 Hz	P1 MÁX kW	P2 NOMINAL		In A	CAPACITOR	
				kW	HP		µF	Vc
JETCOM 82 M	60119499	1X115/230 V ~ dual VOLTAGE	0.93	0.5	0.8	8.21- 4.22	50	450
JETCOM 102 M	60119500	1X115/230 V ~ dual VOLTAGE	1.12	0.75	1	10.3- 5.25	50	450
JETCOM 132 M	60119501	1X115/230 V ~ dual VOLTAGE	1.57	1	1.36	14.7- 7.52	80	450

TECHNICAL DATA - *JET*

MODEL	CODE	ELECTRICAL DATA						
		VOLTAGE 60 Hz	P1 MÁX kW	P2 NOMINAL		In A	CAPACITOR	
				kW	HP		µF	Vc
JET 50	102668010.	1X115/230 V~	0.93	0.37	0.5	8.21- 4.22	50	450
JET 75	102668020.	1X115/230 V~	1.12	0.56	0.75	10.3- 5.25	50	450
JET 75-1	102668040.	1X115/230 V~	1.12	0.56	0.75	8.55- 4.33	50	250
JET 100	102668030.	1X115/230 V~	1.48	0.75	1	13.8 - 7.10	80	250
JET 100-1	102668050.	1X115/230 V~	1.48	0.75	1	13.8 - 7.10	80	250
JET 150	102166030.	1X230 V~	1.7	1.1	1.5	8	31.5	450
JET 200	102166040.	1X230 V~	2.4	1.5	2	11	40	450

JETCOM - JET

SELF-PRIMING CENTRIFUGAL PUMPS

RANGE PERFORMANCE

JETCOM 82 - JET 50

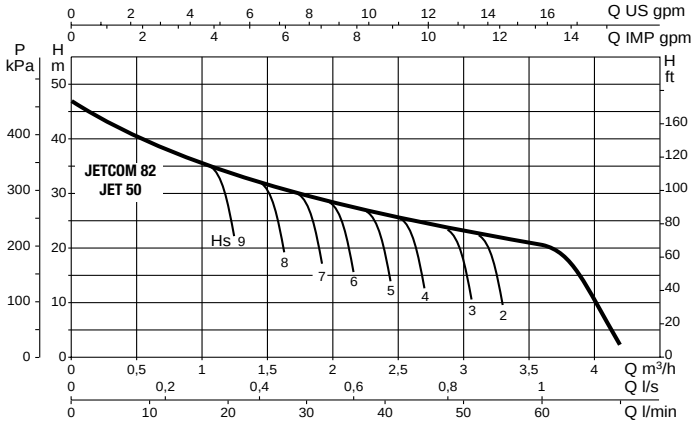

JETCOM 102 - JET 75

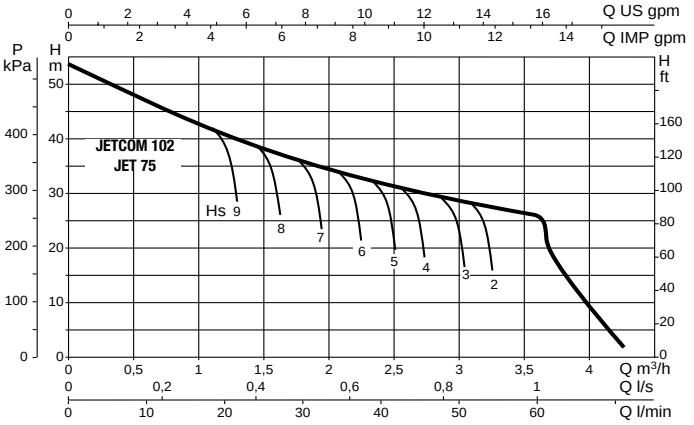

JET 75-1

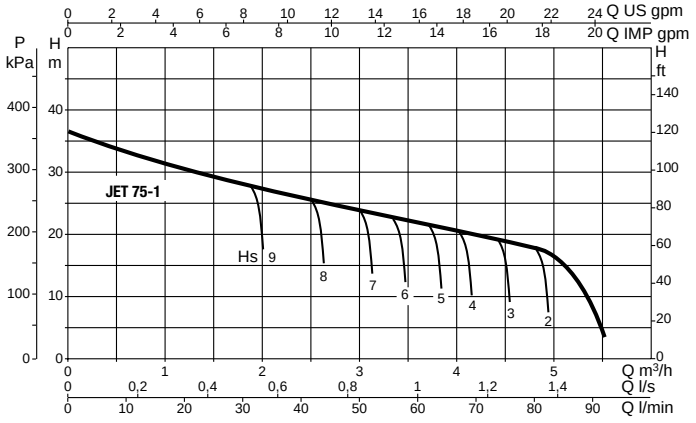

JET 100

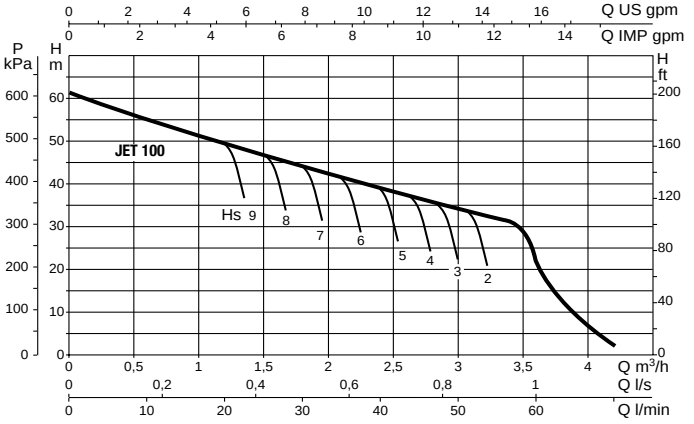

JETCOM 132 - JET 100-1

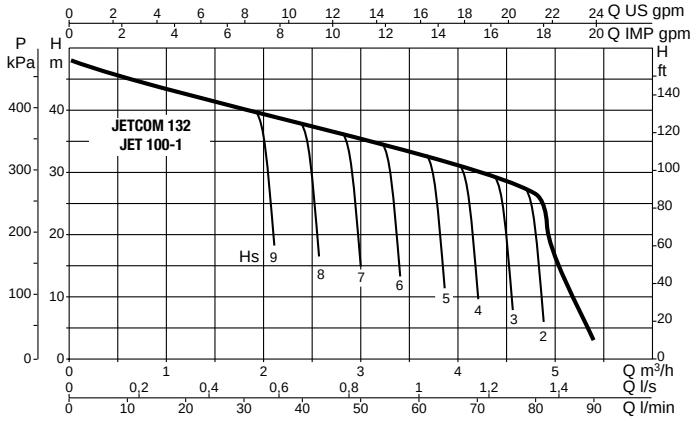

JET 150

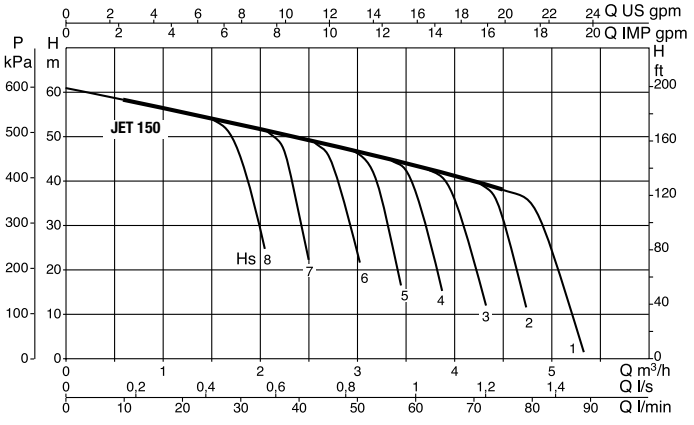

DAB PUMPS reserves the right to make modifications without notice

JETCOM - JET

SELF-PRIMING CENTRIFUGAL PUMPS

RANGE PERFORMANCE

JET 200

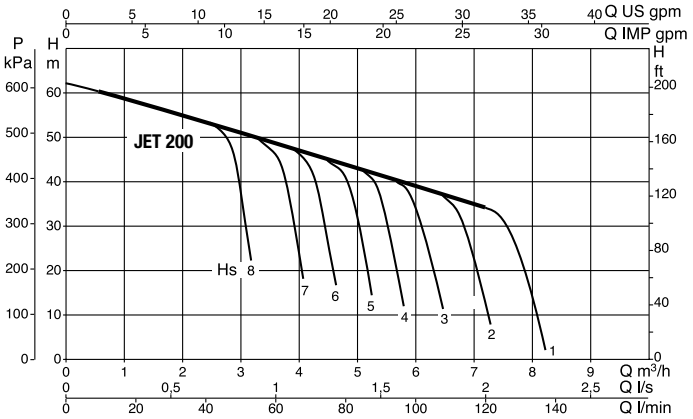

JETCOM - JET

MODEL	P2 NOMINAL		Q=(GPM)	0	2.6	5.3	7.9	10.6	13.2	15.8	18.5	21.1	26.4	31.7	39.6	42.2	46.2
	kW	HP	Q=l/min	0	10	20	30	40	50	60	70	80	100	120	150	160	175
JETCOM 82 M	0.6	0.8	H (ft)	154	131	112	98	86	77	66							
			H (m)	47	40	34	30	26.2	23.5	20							
JETCOM 102 M	0.75	1	H (ft)	177	154	135	119	106	94	85							
			H (m)	53.8	47	41	36.3	32.4	28.8	25.8							
JETCOM 132 M	1	1.36	H (ft)	158	150	140	131	123	115	107	98	89					
			H (m)	48.3	45.6	42.8	40	37.6	35	32.5	30	27.2					
JET 50	0.6	0.8	H (ft)	154	131	112	98	86	77	67							
			H (m)	47	40	34	30	26.2	23.5	20.3							
JET 75	0.75	1	H (ft)	177	154	135	119	106	94	85							
			H (m)	53.8	47	41	36.3	32.4	28.8	25.8							
JET 75-1	0.75	1	H (ft)	119	110	102	93	85	79	72	64	56					
			H (m)	36.2	33.5	31	28.4	26	24	21.8	19.6	17					
JET 100	1	1.36	H (ft)	200	177	157	140	127	114	66							
			H (m)	61	54	47.8	42.8	38.8	34.8	20							
JET 100-1	1	1.36	H (ft)	158	150	140	131	123	115	107	98	89					
			H (m)	48.3	45.6	42.8	40	37.6	35	32.5	30	27.2					
JET 150	1.1	1.5	H (ft)	200	191	184	174	164	151	141	118						
			H (m)	61	58.2	56	53	50	46	43	36						
JET 200	1.85	2.5	H (ft)	203	197	190	184	177	167	159	151	143	128	112			
			H (m)	62	60	58	56	54	51	48.5	46	43.5	39	34.2			

JETCOM - JET

SELF-PRIMING CENTRIFUGAL PUMPS

RANGE PERFORMANCE

JET

MODEL	HP	DEPTH TO WATER	units	DISCHARGE PRESSURE psi (bar)											SHUT OFF PRESSURE psi (bar)
			psi	15	20	25	30	35	40	45	50	55	60	65	
			bar	(1.03)	(1.38)	(1.73)	(2.07)	(2.41)	(2.76)	(3.10)	(3.45)	(3.79)	(4.14)	(4.48)	
JET 50	1/2	5 ft	gpm	14.8	14.8	14.7	13.6								62 (4.27)
		1.5 m	l/miin	56.02	56.02	55.65	51.48								
		10 ft	gpm	13.2	13.2	13.1	12.8								
		3.0 m	l/miin	49.97	49.97	49.59	48.45								
		15 ft	gpm		10.8	10.8	10.7	10.1							
		4.6 m	l/miin		40.88	40.88	40.50	38.23							
		20 ft	gpm			8.9	8.9	8.8	7.6						
		6.1 m	l/miin			33.69	33.69	33.31	28.77						
		25 ft	gpm			7	7	7	6.9	5.5					
		7.6 m	l/miin			26.50	26.50	26.50	26.12	20.82					
JET 75	3/4	5 ft	gpm	22.1	22.1	21.6									52 (3.58)
		1.5 m	l/miin	83.66	83.66	81.76									
		10 ft	gpm	19.8	19.8	19.7									
		3.0 m	l/miin	74.95	74.95	74.57									
		15 ft	gpm	17.4	17.4	17.3	17.1								
		4.6 m	l/miin	65.87	65.87	65.49									
		20 ft	gpm		15.2	15.2	15.1								
		6.1 m	l/miin		57.54	57.54	57.16								
		25 ft	gpm	12.1	12.1	12	12	11.8							
		7.6 m	l/miin	45.80	45.80	45.42	45.42	44.67							
JET 75-1	3/4	5 ft	gpm			14.3	14.3	14.2	12.6						75 (5.17)
		1.5 m	l/miin			54.13	54.13	53.75	47.70						
		10 ft	gpm			13.1	13.1	13	12.3						
		3.0 m	l/miin			49.59	49.59	49.21	46.56						
		15 ft	gpm				11	11	11	11					
		4.6 m	l/miin				41.64	41.64	41.64	41.64					
		20 ft	gpm				9.2	9.1	9.1	9					
		6.1 m	l/miin				34.83	34.45	34.45	34.07					
		25 ft	gpm					7	7	7	6.9				
		7.6 m	l/miin					26.50	26.50	26.50	26.12				
JET 100	1	5 ft	gpm	21.8	21.8	21.6	21.5	21.3							71 (4.89)
		1.5 m	l/miin	82.52	82.52	81.76	81.39	80.63							
		10 ft	gpm	19.2	20.1	19.8	19.8	19.5	19.3						
		3.0 m	l/miin	72.68	76.09	74.95	74.95	73.82	73.06						
		15 ft	gpm	17.6	17.5	17.4	17.3	17.1	17						
		4.6 m	l/miin	66.62	66.24	65.87	65.49	64.73	64.35						
		20 ft	gpm		15.1	14.9	14.9	14.8	14.5	14.4					
		6.1 m	l/miin		57.16	56.40	56.40	56.02	54.89	54.51					
		25 ft	gpm		12	11.8	11.8	11.7	11.7	11.6	11.4				
		7.6 m	l/miin		45.42	44.67	44.67	44.29	44.29	43.91	43.15				
JET 100-1	1	5 ft	gpm				14.5	14.4	14.3	14.2					86 (5.93)
		1.5 m	l/miin				54.89	54.51	54.13	53.75					
		10 ft	gpm					13.1	12.8	12.7	12.4				
		3.0 m	l/miin					49.59	48.45	48.07					
		15 ft	gpm						11.8	11.6	11.4	10.9			
		4.6 m	l/miin						44.67	43.91	43.15	41.26			
		20 ft	gpm						9.9	9.8	9.7	9.4			
		6.1 m	l/miin						37.48	37.10	36.72	35.58			
		25 ft	gpm								7.9	7.8	7.7	7.3	
		7.6 m	l/miin								29.90	29.53	29.15	27.63	
JET 150	1	5 ft	gpm		21	20.9	20.7	20.6	20.3	20.2	19.9				87 (6.0)
		1.5 m	l/miin		79.49	79.12	78.36	77.98	76.84	76.47	75.33				
		10 ft	gpm		19	18.8	18.5	18.2	17.9	17.8	17.5	17.3			
		3.0 m	l/miin		71.92	71.17	70.03	68.89	67.76	67.38	66.24	65.49			
		15 ft	gpm			15.7	15.5	15.4	15.2	15.1	15	14.8	14.5		
		4.6 m	l/miin			59.43	58.67	58.30	57.54	57.16	56.78	56.02	54.89		
		20 ft	gpm				13.3	13.1	12.9	12.7	12.5	12.4	12.1	11.9	
		6.1 m	l/miin				50.35	49.59	48.83	48.07	47.32	46.94	45.80	45.05	
		25 ft	gpm					9.7	9.5	9.3	9.1	8.9	8.6	8.5	
		7.6 m	l/miin					36.72	35.96	35.20	34.45	33.69	32.55	32.18	
JET 200	1	5 ft	gpm		31.8	31.6	31.2	30.8	30.5	30.1	29.1				85 (5.86)
		1.5 m	l/miin		120.38	119.62	118.10	116.59	115.46	113.94	110.16				
		10 ft	gpm		28	27.7	27.6	27.2	26.9	26.7	26	25.1			
		3.0 m	l/miin		105.99	104.86	104.48	102.96	101.83	101.07	98.42	95.01			
		15 ft	gpm		23.6	23.3	23.2	23.1	22.8	22.5	22.3	22.1	20.9		
		4.6 m	l/miin		89.34	88.20	87.82	87.44	86.31	85.17	84.41	83.66	79.12		
		20 ft	gpm			20.2	19.9	19.8	19.7	19.4	19.3	19	18.5	17.3	
		6.1 m	l/miin			76.47	75.33	74.95	74.57	73.44	73.06	71.92	70.03	65.49	
		25 ft	gpm					14.3	14.2	14.1	13.8	13.7	13.4	13.2	
		7.6 m	l/miin					54.13	53.75	53.37	52.24	51.86	50.72	49.97	

DAB PUMPS reserves the right to make modifications without notice

JETCOM - JET

SELF-PRIMING CENTRIFUGAL PUMPS

DIMENSIONS AND WEIGHTS

JETCOM

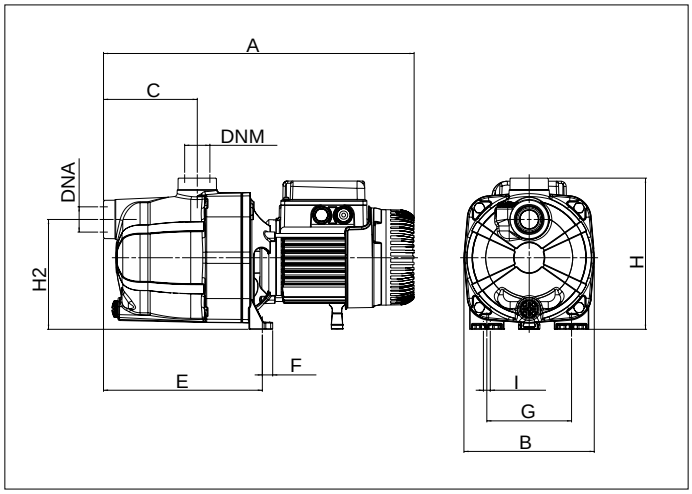

JET 50 - 75 - 75-1 - 100 - 100-1

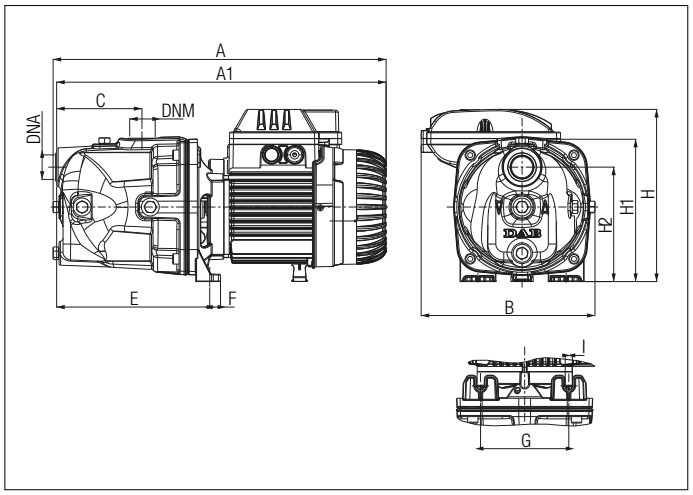

JET 150 - 200

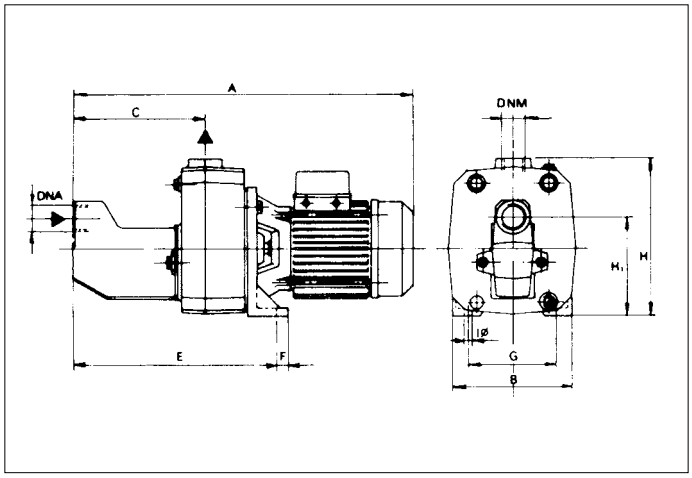

MODEL	units	A	A1	B	C	E	F	G	H	H1	H2	I Ø	DNA (NPT)	DNM (NPT)	L/A	L/B	H	WEIGHT	Q.TY x PALLET
JETCOM 82	inches	16	-	6.7	4.8	8.2	0.6	4.4	7.8	-	5.7	0.4	1"	1"	18.5	9.4	9.4	17 lbs	28
	mm	406	-	170	122	208	14	111	198	–	144	9			470	240	240	7.7 kg	
JETCOM 102	inches	16.7	-	6.7	4.8	8.2	0.6	4.4	8	-	5.7	0.4	1"	1"	18.5	9.4	9.4	20.9 lbs	28
	mm	425	-	170	122	208	14	111	203	–	144	9			470	240	240	9.5 kg	
JETCOM 132 M	inches	16.7	-	6.7	4.8	8.2	0.6	4.4	8	-	5.7	0.4	1"	1"	18.5	9.4	9.4	23.1 lbs	28
	mm	425	-	170	122	208	14	111	203	–	144	9			470	240	240	10.5 kg	
JET 50	inches	15.6	15. 5	8.6	4.2	7.6	0.6	4.4	8.1	-	5.7	0.4	1"	1"	18.5	9.4	9.4	23.6 lbs	28
	mm	397	393	218	107	192	14	111	206	–	144	9			470	240	240	10.7 kg	
JET 75	inches	16.5	16.3	8.6	4.2	7.6	0.6	4.4	8.5	7	5.7	0.4	1"	1"	18.5	9.4	9.4	27.6 lbs	28
	mm	418	413	218	107	192	14	111	216	178	144	9			470	240	240	12.5 kg	
JET 75-1	inches	15.6	15.4	7	4.3	7.6	0.6	4.4	7.6	-	5.7	0.4	1"	1"	18.5	9.4	9.4	25.8 lbs	28
	mm	395	390	178	108	192	14	111	193	–	144	9			470	240	240	11.7 kg	
JET 100	inches	16.3	16.1	7	4.3	7.6	0.6	4.4	8	-	5.7	0.4	1"	1"	18.5	9.4	9.4	29.8 lbs	28
	mm	414	409	178	108	192	14	111	203	–	144	9			470	240	240	13.5 kg	
JET 100-1	inches	16.3	16.1	10.4	4.3	7.6	0.6	4.4	8	-	5.7	0.4	1"	1"	18.5	9.4	9.4	29.8 lbs	28
	mm	414	409	263	108	192	14	111	203	–	144	9			470	240	240	13.5 kg	
JET 150	inches	22	8.3	8.7	13.8	0.8	5.7	0.4	10	6,2	-	-	1 1/4"	1 "	24.1	9.8	11	68.3 lbs	18
	mm	558	210	221	350	20	145	11	255	158	–	–			612	248	279	31 kg	
JET 200	inches	24.9	8.3	8.7	13.8	0.8	5.7	0.4	10	6,2	-	-	1 1/4"	1 "	25.9	9.8	11	77.2 lbs	15
	mm	632	210	221	350	20	145	11	255	158	–	–			657	248	279	35 kg	

JET PRESSURE SWITCH

CENTRIFUGAL PUMPS FITTED



JET 50-75-100 PS



JET 150-200 PS



JET 300 PS

SINGLE-PHASE VERSION
Self-priming pump equipped with a pressure switch

THREE-PHASE VERSION
Available on request

Operating range from 1.8 to 46.2 gpm (0.4 to 10.5 m^3/h) with head up to 203 ft (62 m)

Liquid quality requirements clean, free from solid or abrasive contaminants, non-viscous, non-aggressive, uncrystallised and chemically neutral, close to the properties of water.

Liquid temperature range from 32°F to +95°F (0°C to +35°C) for domestic use.
for other use: from 32°F to +104°F (0°C to +40°C)

Maximum ambient temperature +104°F (40°C)

Maximum operating pressure 116 psi (8 bar)

Installation fixed in a horizontal position.

Special executions on request
different frequencies and/or voltage.

Motor protection rating IP 44

Terminal block protection rating IP 55

Insulation class F

TECHNICAL DATA

MODEL	CODE	ELECTRICAL DATA						
		VOLTAGE 60 Hz	P1 MÁX kW	P2 NOMINAL		In A	CAPACITOR	
				kW	HP		µF	Vc
JET 50-PS	102668110.	1X115/230 V~	0.93	0.37	0.5	8.21-4.22	50	450
JET 75-PS	102668120.	1X115/230 V~	1.12	0.56	0.75	10.3-5.25	50	450
JET 75-1-PS	102668140.	1X115/230 V~	1.12	0.56	0.75	10.3-5.25	50	250
JET 100-PS	102668130.	1X115/230 V~	1.48	0.75	1	13.8-7.10	80	250
JET 100-1-PS	102668150.	1X115/230 V~	1.48	0.75	1	13.8-7.10	80	250
JET 150-PS	102166230.	1X230 V~	1.7	1.1	1.5	8	31.5	450
JET 200-PS	102166240.	1X230 V~	2.4	1.5	2	11	40	450
JET 300-PS	102166250.	1X230 V~	2.65	2.2	3	12	40	450

RANGE PERFORMANCE

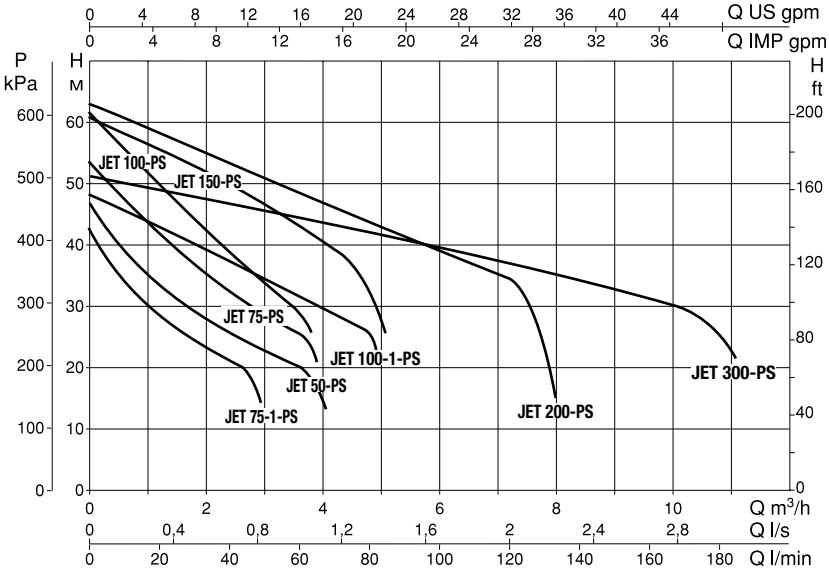

DAB PUMPS reserves the right to make modifications without notice

EI BOOSTER

MULTISTAGE CENTRIFUGAL PUMPS



EI BOOSTER

C US

Horizontal centrifugal pump assembled with mascontrol for automatic operation.
Starts and stops the pump depending on opening and closing of the taps.
Stops the pump in case of a water shortage and protects it from dry running.
Is equipped with automatic restarts in case of failure and anti-jamming function.
No need for an expansion tank, check valve, filter or fittings.
Multistage horizontal centrifugal pump, featuring extremely silent running suitable for domestic use for water supply and pressurisation, irrigation of gardens and vegetable gardens, and moving water in general.
EI BOOSTER: stainless steel pump body.
Motor support in die-cast aluminium, seal holder in AISI 304 steel. Mechanical seal in carbon/ceramic. Rotor shaft in AISI 304 steel. Rotors, diffuser bodies and diffusers in technopolymer. Adjustment rings in stainless steel.

Protection level of motor IP 44
Protection level of terminal board IP 55
Insulation class F
Operating range
from 2.6 to 31.7 gpm (0.6 to 7.2 m^3/h)
with a head of up to 236 ft (72 m.)
Pumped liquid characteristics clean, free from solid or abrasive substances, non-viscous, non-aggressive, non-crystallised, chemically neutral and close to the characteristics of water
Liquid temperature range
from 32°F to +104°F (0°C to +40°C)
Maximum ambient temperature +104°F (+40°C)
Maximum operating pressure 116 psi (8 bar)
EI booster self-priming

TECHNICAL DATA

MODEL	CODE	ELECTRICAL DATA						
		VOLTAGE 60 Hz	P1 MÁX kW	P2 NOMINAL		In A	CAPACITOR	
				kW	HP		µF	Vc
EI BOOSTER 30/506 M	TBD	1x115V	0.94	0.5	0.75	8.31-4.28	50	250
EI BOOSTER 40/506 M	TBD	1x115V	1.3	0.8	1.1	13.1-6.6	80	250
EI BOOSTER 50/506 M	TBD	1x115V	1.5	1	1.36	14.6-7.4	80	250
EI BOOSTER 40/806 M	TBD	1x115V	1.5	1	1.36	14.6-7.4	80	250

DEVICE FOR CONTROL AND PROTECTION OF THE PUMP	DESCRIPTION	MODEL	CODE
 **MASCONTROL**	Can be energized with either 115 Vac or 230 Vac. Starts and stops the pump depending on opening and closing of the taps. It has 1"1/4 male connections to guarantee a higher flow rate. Stops the pump in case of a water shortage and protects it from dry running Is equipped with automatic restarts in case of failure and anti-jamming function. No need for an expansion tank, check valve, filter or fittings. Can be installed on surface and submersible pumps up to 3 HP. Maintenance free.	**MCDV222101 1" 22 PS**	109640400
		MCDV232101 1" 32 PS	109640410
		MCDV242101 1" 44 PS	109640420
		MCDV222114 1 1/4" 22 PSI	109640440
		MCDV232114 1 1/4" 32 PSI	109640450
		MCDV242114 1 1/4" 44 PSI	109640460
 **CONTROLPRESS**	Can be energized with either 115 Vac or 230 Vac. Starts and stops the pump depending on opening and closing of the taps. It allows to reduce the maximum pressure of the pump and to set the working pressure. Stops the pump in case of a water shortage and protects it from dry running. Is equipped with automatic restart in case of failure and anti-jamming function. No need for an expansion tank, check valve, filter or fittings. Can be installed on surface and submersible pumps up to 3 HP.	**MCDV114PR 1 1/4" 35-100 PSI**	109640360

EI BOOSTER

MULTISTAGE CENTRIFUGAL PUMPS

RANGE PERFORMANCE

EI BOOSTER 50

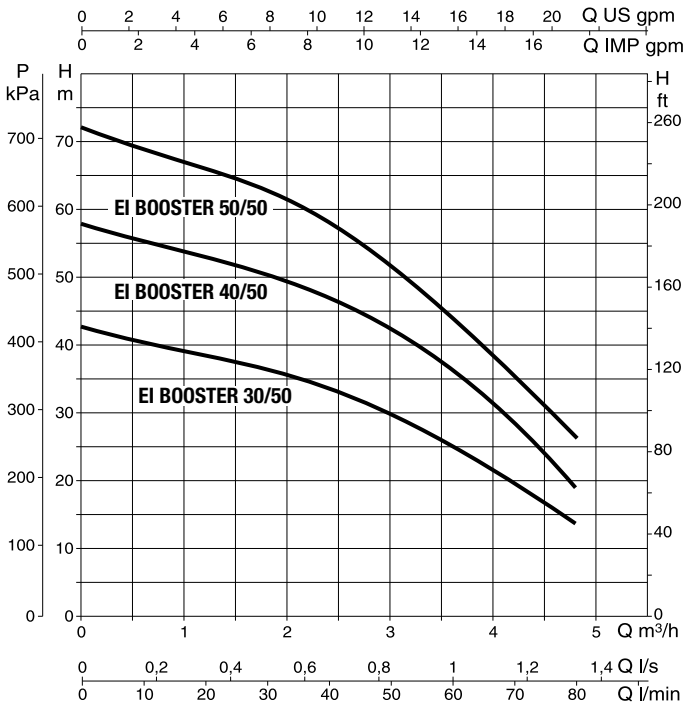

EI BOOSTER 80

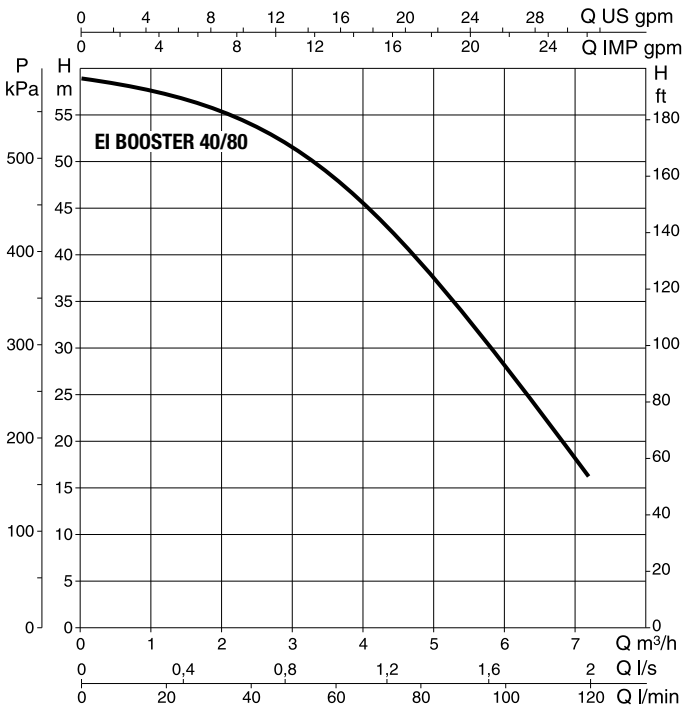

MODEL	P2 NOMINAL		Q = gpm	0	2.6	5.3	7.9	10.6	13.2	15.8	18.5	21.1	26.4	31.7	39.6	42.2	46.2
			Q = l/min	0	10	20	30	40	50	60	70	80	100	120	150	160	175
EI BOOSTER 30/506 M	0.55	0.75	H (ft)	138	132	125	119	111	98	81	64	46					
			H (m)	42.1	40.2	38.1	36.3	33.8	29.9	24.7	19.5	14.0					
EI BOOSTER 40/506 M	0.75	1	H (ft)	190	181	173	164	155	140	117	92	62					
			H (m)	57.9	55.2	52.7	50.0	47.2	42.7	35.7	28.0	18.9					
EI BOOSTER 50/506 M	1	1.36	H (ft)	236	225	215	204	191	171	143	113	85					
			H (m)	71.9	68.6	65.5	62.2	58.2	52.1	43.6	34.4	25.9					
EI BOOSTER 40/806 M	1	1.36	H (ft)	194		187	184	177	167	154	143	128	97	54			
			H (m)	59.1	0.0	57.0	56.1	53.9	50.9	46.9	43.6	39.0	29.6	16.5			

DAB PUMPS reserves the right to make modifications without notice

EI BOOSTER

MULTISTAGE CENTRIFUGAL PUMPS

DIMENSIONS AND WEIGHTS

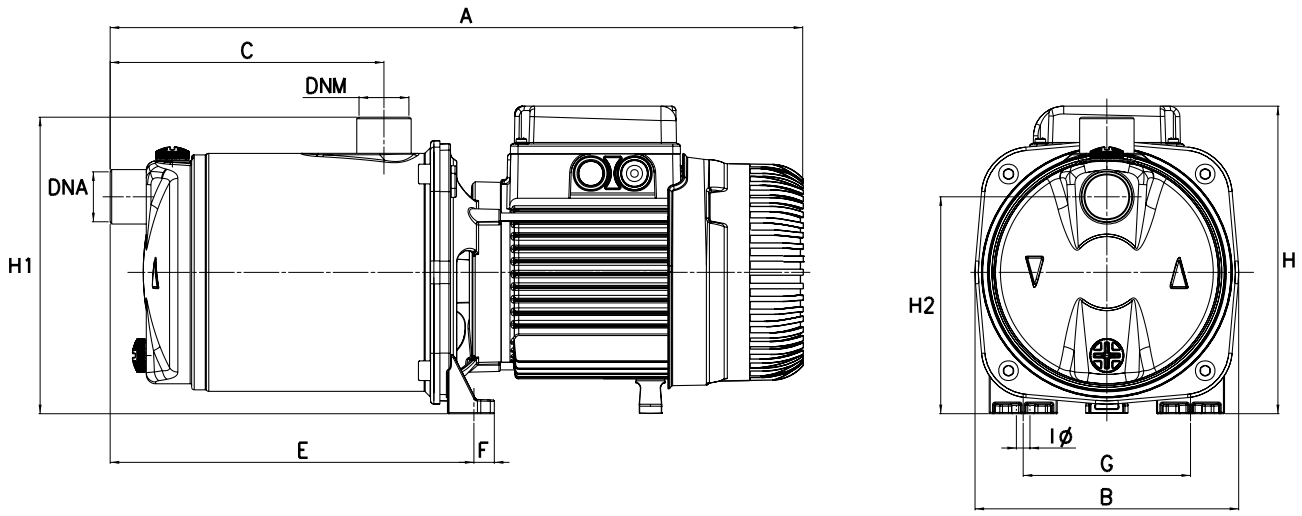

MODEL	units	A	B	C	E	F	G	IØ 4 Holes	H	H1	H2	DNA (NPT)	DNM (NPT)	PACKING DIMENSIONS			WEIGHT	Q.TY x PALLET
														L/A	L/B	H		
EI BOOSTER 30/506 M	inches	15.1	6.9	4.3	7.3	0.5	4.4	0.4	7.6	7.7	5.6	1"	1"	17.3	8.1	9.6	23.1lbs	28
	mm	384	174	108	186	13,5	111	9	193	196	143			440	206	245	10,5	
EI BOOSTER 40/506 M	inches	18	6.9	6.5	9.5	0.5	4.4	0.4	8	7.7	5.6	1"	1"	18.9	8.3	10.4	32.2 lbs	28
	mm	458	174	166	241	13,5	111	9	203	196	143			480	212	265	14,6	
EI BOOSTER 50/506 M	inches	18	6.9	6.5	9.5	0.5	4.4	0.4	8	7.7	5.6	1"	1"	18.9	8.3	10.4	33.3 lbs	28
	mm	458	174	166	241	13,5	111	9	203	196	143			480	212	265	15,1	
EI BOOSTER 40/806 M	inches	18	6.9	6.5	9.5	0.5	4.4	0.4	8	7.7	5.6	1"	1"	18.9	8.3	10.4	33.3 lbs	28
	mm	458	174	166	241	13,5	111	9	203	196	143			480	212	265	15,1	

JETSS

SELF-PRIMING CENTRIFUGAL PUMPS



C US

Self-priming centrifugal pump with excellent suction capacity even when there are air bubbles. Particularly suitable for water supply in domestic installations, small-scale agriculture, gardening and wherever self- priming operation is necessary.
JETSS: stainless steel pump body.
Motor support in cast iron, technopolymer impeller, diffuser, Venturi tube and sand guard. Stainless steel adjustment rings.
Carbon/ceramic mechanical seal. Asynchronous motor closed and cooled by external ventilation.
Built-in thermal and current overload protection and a capacitor permanently on in the single-phase version. For the protection of the three-phase motor it is advisable to use a suitable overload protection complying with the regulations in force.

Operating range two-poles from 1.8 to 46.2 gpm (0.4 to 10.5 m^3/h) with head up to 203 ft (62 m)

Liquid temperature range
from 32°F to +95°F (0°c to +35°C)for domestic use
from 32°F to +104°F (0°c to +40°C for other use

Pumped liquid characteristics clean, free from solids or abrasive substances, non-viscous, non- aggressive, non-crystallised and chemically neutral

Maximum ambient temperature +104 F (+40°C

Maximum working pressure 116 psi (8 bar)

Protection level
IP 44 (IP 55 terminal board protection)

Insulation class F

TECHNICAL DATA

MODEL	CODE	ELECTRICAL DATA						
		VOLTAGE 60 Hz	P1 MÁX kW	P2 NOMINAL		In A	CAPACITOR	
				kW	HP		µF	Vc
JETSS 50	102648010.	1X115/230 V~	0.93	0.37	0.5	8.21-4.22	50	450
JETSS 75	102648020.	1X115/230 V~	1.12	0.56	0.75	10.3-5.25	50	450
JETSS 75-1	102648040.	1X115/230 V~	1.12	0.56	0.75	10.3-5.25	50	250
JETSS 100	102648030.	1X115/230 V~	1.48	0.75	1	13.8-7.10	80	250
JETSS 100-1	102648050.	1X115/230 V~	1.48	0.75	1	13.8-7.10	80	250

DAB PUMPS reserves the right to make modifications without notice

JETSS

SELF-PRIMING CENTRIFUGAL PUMPS

RANGE PERFORMANCE

JETSS 50

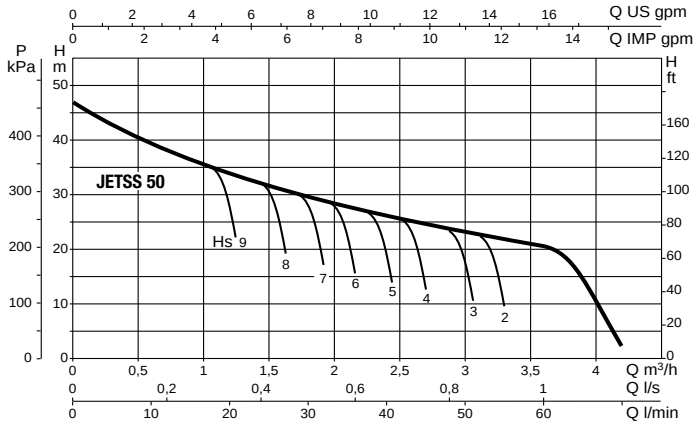

JETSS 75

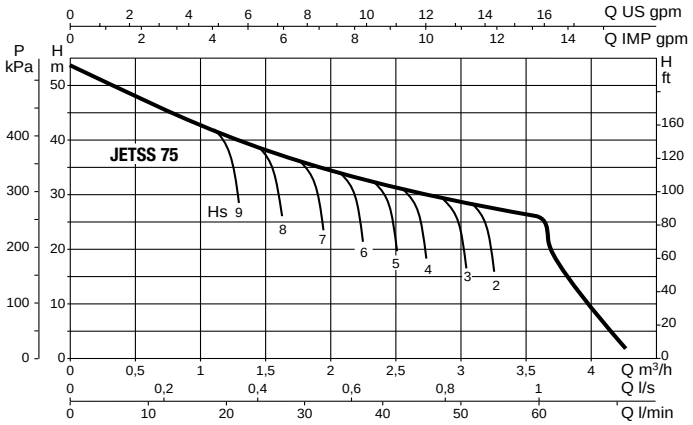

JETSS 75-1

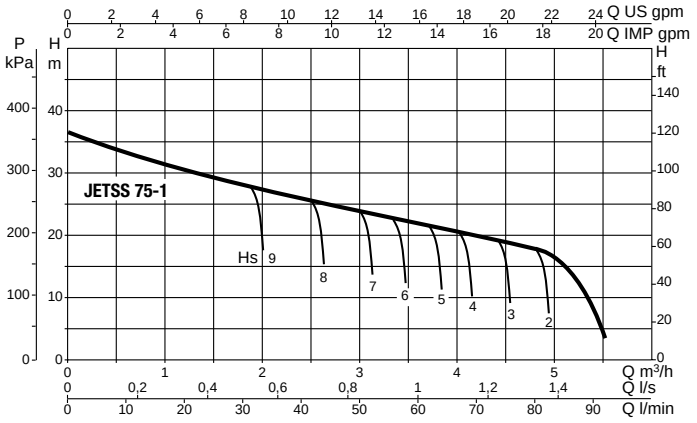

JETSS 100

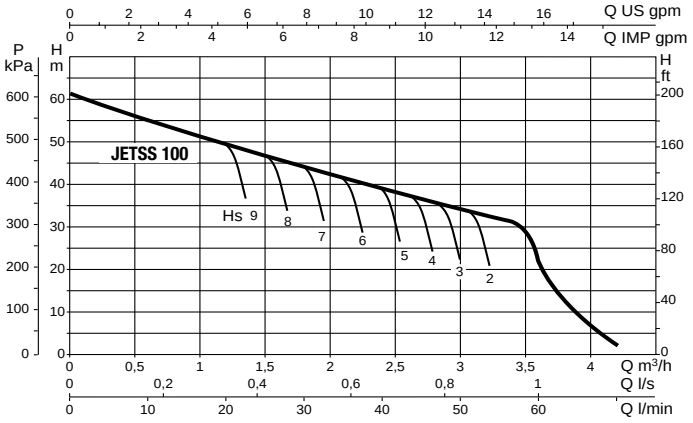

JETSS 100-1

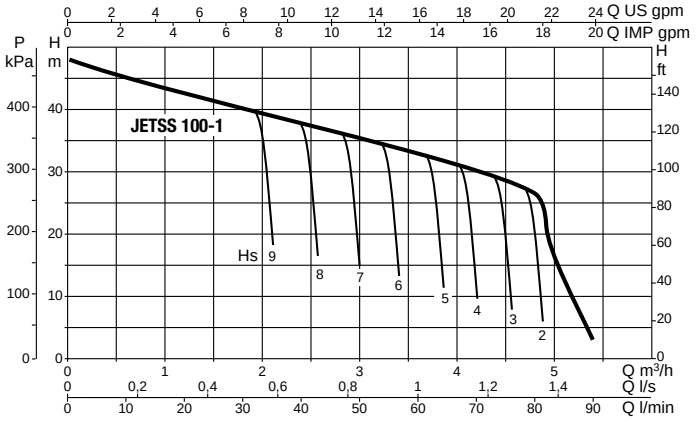

JETSS

SELF-PRIMING CENTRIFUGAL PUMPS

RANGE PERFORMANCE

MODEL	P2 NOMINAL		Q = gpm	0	2.6	5.3	7.9	10.6	13.2	15.8	18.5	21.1	26.4	31.7	39.6	42.2	10.5
	kW	HP	Q = l/min	0	10	20	30	40	50	60	70	80	100	120	150	160	175
JETSS 50	0.6	0.8	H (ft)	154	131	112	98	86	77	67							
			H (m)	47	40	34	30	26,2	23,5	20,3							
JETSS 75	0.75	1	H (ft)	177	154	135	119	106	94	85							
			H (m)	53,8	47	41	36,3	32,4	28,8	25,8							
JETSS 75-1	0.75	1	H (ft)	119	110	102	93	85	79	72	64	57					
			H (m)	36,2	33,5	31	28,4	26	24	21,8	19,6	17,5					
JETSS 100	1	1.36	H (ft)	200	177	157	140	127	114	66							
			H (m)	61	54	47,8	42,8	38,8	34,8	20							
JETSS 100-1	1	1.36	H (ft)	158	150	140	131	123	115	107	98	89					
			H (m)	48,3	45,6	42,8	40	37,6	35	32,5	30	27,2					

DIMENSIONS AND WEIGHTS

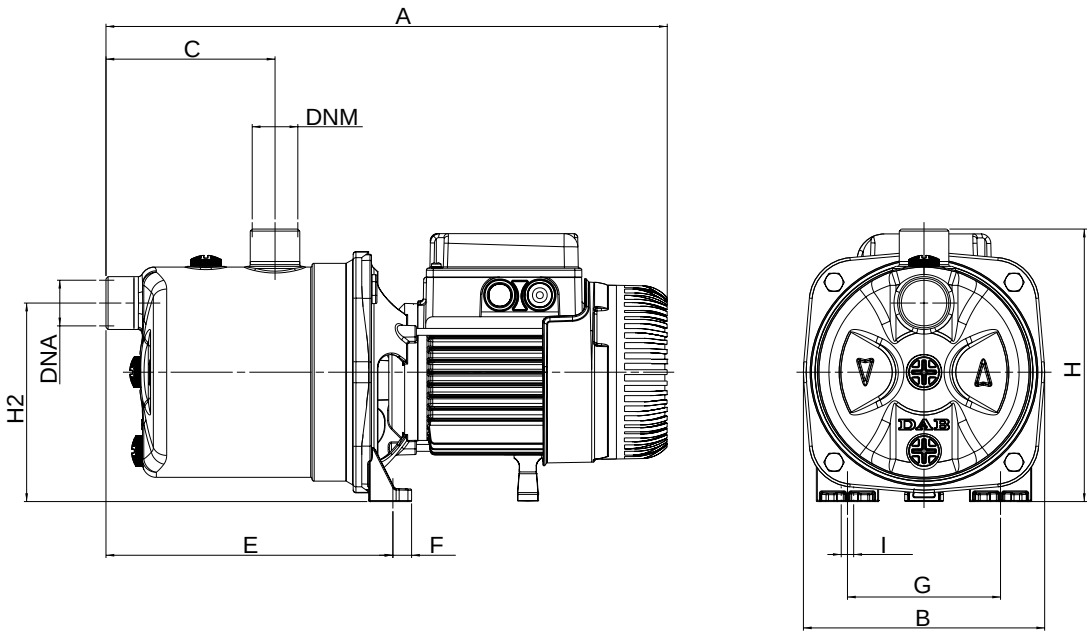

MODEL	units	A	A1	B	C	E	F	G	H	H1	H2	I Ø	DNA (NPT)	DNM (NPT)	L/A	L/B	H	WEIGHT	Q.TY x PALLET
JETSS 50	inches	16	-	6.9	4.8	8.1	0.6	4.4	7.8	-	5.7	0.4	1"	1"	18.5	9.4	9.4	17.2 lbs	28
	mm	406		174	122	207	14	111	197	–	144	9			470	240	240	7.8 kg	
JETSS 75	inches	16.7	-	6.9	4.8	8.1	0.6	4.4	7.8	-	5.7	0.4	1"	1"	18.5	9.4	9.4	21.2 lbs	28
	mm	424		174	122	207	14	111	197	–	144	9			470	240	240	9.6 kg	
JETSS 75-1	inches	16	-	6.9	4.8	8.1	0.6	4.4	7.8	-	5.7	0.4	1"	1"	18.5	9.4	9.4	19.4 lbs	28
	mm	406		174	122	207	14	111	197	–	144	9			470	240	240	8.8 kg	
JETSS 100	inches	16.7	-	6.9	4.8	8.1	0.6	4.4	7.8	-	5.7	0.4	1"	1"	18.5	9.4	9.4	23.4 lbs	28
	mm	424		174	122	207	14	111	197	–	144	9			470	240	240	10.6 kg	
JETSS 100-1	inches	16.7	-	6.9	4.8	8.1	0.6	4.4	7.8	-	5.7	0.4	1"	1"	18.5	9.4	9.4	23.4 lbs	28
	mm	424		174	122	207	14	111	197	–	144	9			470	240	240	10.6 kg	

DAB PUMPS reserves the right to make modifications without notice

JETSS PRESSURE SWITCH

CENTRIFUGAL PUMPS FITTED



C US

SINGLE-PHASE VERSION
Self-priming pump equipped with a pressure switch,.

THREE-PHASE VERSION
Available on request.

Operating range from 1.8 to 46.2 gpm (0.4 to 10.5 m^3/h) with head up to 203 ft (62 m)

Liquid quality requirements clean, free from solid or abrasive contaminants, non-viscous, non-aggressive, uncrystallised and chemically neutral, close to the properties of water

Liquid temperature range from 32°F to +95°F (0°C to +35°C)for domestic use
for other use: from 32°F to +104°F (0°C to +40°C)

Maximum ambient temperature +104 F (+40°C)

Maximum operating pressure 116 psi (8 bar)

Installation fixed in a horizontal position

Special executions on request
different frequencies and/or voltage

Motor protection rating IP 44

Terminal block protection rating IP 55

Insulation class F

Standard input voltage
single phase 110/127 - 220/240 V / 60 Hz
three phase 230/460 V - 60 Hz ON REQUEST

TECHNICAL DATA

MODEL	CODE	ELECTRICAL DATA						
		VOLTAGE 60 Hz	P1 MÁX kW	P2 NOMINAL		In A	CAPACITOR	
				kW	HP		µF	Vc
JETSS 50-PS	102648110.	1X115/230 V~	0.93	0.37	0.5	8.21-4.22	50	450
JETSS 75-PS	102648120.	1X115/230 V~	1.12	0.56	0.75	10.3-5.25	50	450
JETSS 75-1-PS	102648140.	1X115/230 V~	1.12	0.56	0.75	10.3-5.25	50	250
JETSS 100 -PS	102648130.	1X115/230 V~	1.48	0.75	1	13.8-7.10	80	250
JETSS 100-1 -PS	102648150.	1X115/230 V~	1.48	0.75	1	13.8-7.10	80	250

RANGE PERFORMANCE

MODEL	Q = gpm	0	2.6	5.3	7.9	10.6	13.2	15.8	18.5	21.1
	Q = l/min	0	10	20	30	40	50	60	70	80
JETSS 50-PS	H (ft)	154	131	112	98	86	77	67	0	0
	H (m)	47	40	34	30	26,2	23,5	20,3		
JETSS 75-PS	H (ft)	177	154	135	119	106	94	85	0	0
	H (m)	53.8	47	41	36.3	32.4	28.8	25.8		
JETSS 75-1-PS	H (ft)	119	110	102	93	85	79	72	64	56
	H (m)	36.2	33.5	31	28.4	26	24	21.8	19.6	17
JETSS 100 -PS	H (ft)	200	177	157	140	127	114	66	0	0
	H (m)	61	54	47.8	42.8	38.8	34.8	20		
JETSS 100-1 -PS	H (ft)	158	150	140	131	123	115	107	98	89
	H (m)	48.3	45.6	42.8	40	37.6	35	32.5	30	27.2

EUROINOX

MULTISTAGE CENTRIFUGAL PUMPS



Multistage horizontal centrifugal pump, featuring extremely silent running suitable for domestic use for water supply and pressurisation, irrigation of gardens and vegetable gardens, and moving water in general.
Euroinox: stainless steel pump body.
Motor support in die-cast aluminium, seal holder in AISI 304 steel. Mechanical seal in carbon/ceramic. Rotor shaft in AISI 304 steel. Rotors, diffuser bodies and diffusers in technopolymer. Adjustment rings in stainless steel.

Protection level of motor IP 44
Protection level of terminal board IP 55
Insulation class F
Operating range from 2.6 to 31.7 gpm (0.6 to 7.2 m^3/h) with a head of up to 236 ft (72 m)
Pumped liquid characteristics clean, free from solid or abrasive substances, non viscous, non aggressive, non crystallised, chemically neutral and close to the characteristics of water
Liquid temperature range
from 32°F to +95°F (0°C to +35°C)for domestic use
from 32 F to +104 F (0°C to +40°C)for other uses
Maximum ambient temperature +104 F (+40°C)
Maximum operating pressure 116 psi (8 bar)
Euroinox self-priming

C US

TECHNICAL DATA

MODEL	CODE	ELECTRICAL DATA						
		VOLTAGE 60 Hz	P1 MÁX kW	P2 NOMINAL		In A	CAPACITOR	
				kW	HP		µF	Vc
EUROINOX 30/306 M	60119512	1X115/230 V~ dual VOLTAGE	0.89	0.33	0.6	8.0- 4.12	50	250
EUROINOX 40/306 M	60119513	1X115/230 V~ dual VOLTAGE	1	0.5	0.75	8.92- 4.55	50	250
EUROINOX 30/506 M	60119514	1X115/230 V~ dual VOLTAGE	0.94	0.5	0.75	8.31- 4.28	50	250
EUROINOX 40/506 M	60119515	1X115/230 V~ dual VOLTAGE	1.3	0.8	1.1	13.0- 6.6	80	250
EUROINOX 50/506 M	60119516	1X115/230 V~ dual VOLTAGE	1.5	1	1.36	14.6- 7.4	80	250
EUROINOX 25/806 M	60119517	1X115/230 V~ dual VOLTAGE	0.9	0.55	0.75	8.3- 4.3	50	250
EUROINOX 30/806 M	60119518	1X115/230 V~ dual VOLTAGE	1.3	0.8	1.1	13.0- 6.5	80	250
EUROINOX 40/806 M	60119519	1X115/230 V~ dual VOLTAGE	1.5	1.1	1.36	14.6- 7.4	80	250

DAB PUMPS reserves the right to make modifications without notice

EUROINOX

MULTISTAGE CENTRIFUGAL PUMPS

RANGE PERFORMANCE

EUROINOX 30

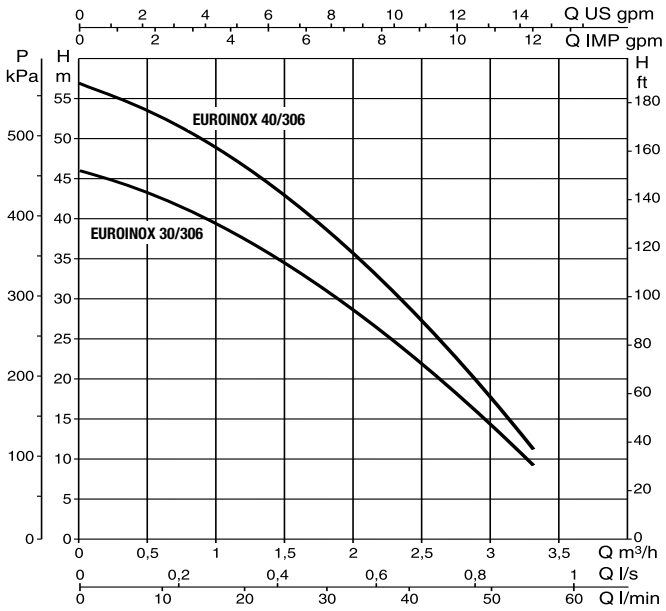

EUROINOX 50

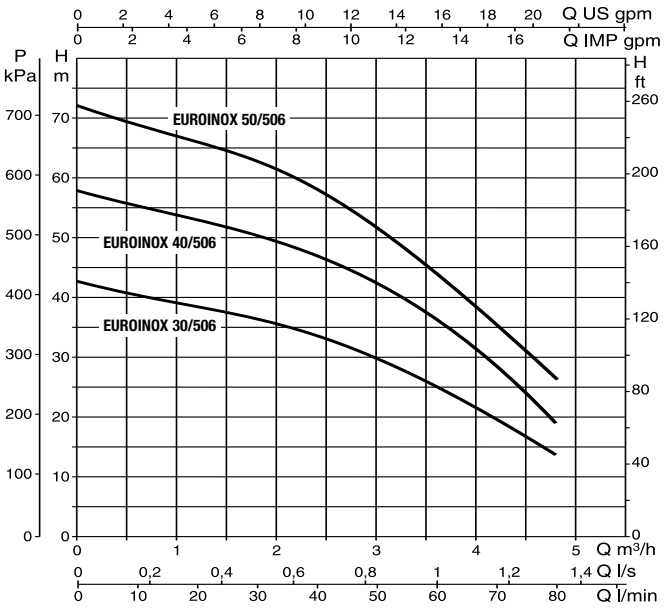

EUROINOX 80

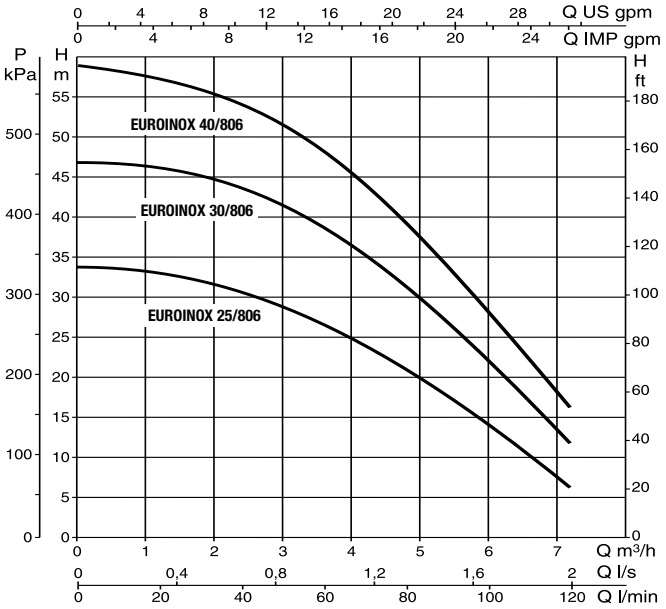

EUROINOX

MULTISTAGE CENTRIFUGAL PUMPS

RANGE PERFORMANCE

MODEL	P2 NOMINAL		Q = gpm	0	2,6	5.3	7.9	10.6	13.2	15.8	18.5	21.1	26.4	31.7
	kW	HP	Q = l/min	0	10	20	30	40	50	60	70	80	100	120
EUROINOX 30/306 M	0.45	0.6	H (ft)	151	138	124	102	76	47					
			H (m)	46	42,2	37,8	31,2	23,3	14,3					
EUROINOX 40/306 M	0.55	0.75	H (ft)	187	173	154	127	95	58					
			H (m)	57	52,7	47	38,8	29	17,7					
EUROINOX 30/506 M	0.55	0.75	H (ft)	138	132	125	119	111	98	81	64	46		
			H (m)	42	40,2	38,2	36,2	33,8	30	24,8	19,5	14		
EUROINOX 40/506 M	0.75	1	H (ft)	190	181	173	164	155	140	117	92	62		
			H (m)	58	55,3	52,8	50,1	47,1	42,7	35,8	28	19		
EUROINOX 50/506 M	1	1.36	H (ft)	236	225	215	204	191	171	143	113	85		
			H (m)	72	68,5	65,5	62,1	58,2	52,2	43,6	34,5	26		
EUROINOX 25/806 M	0.55	0.75	H (ft)	112		108	105	100	94	85	77	69	48	21
			H (m)	34		33	32	30,5	28,5	26	23,5	21	14,5	6,5
EUROINOX 30/806 M	0.8	1.1	H (ft)	154		153	148	143	135	125	113	102	75	39
			H (m)	47		46,5	45	43,5	41	38	34,5	31	23	12
EUROINOX 40/806 M	1	1.36	H (ft)	194		187	184	177	167	154	143	128	97	54
			H (m)	59		57	56	54	51	47	43,5	39	29,5	16,5

DIMENSIONS AND WEIGHTS

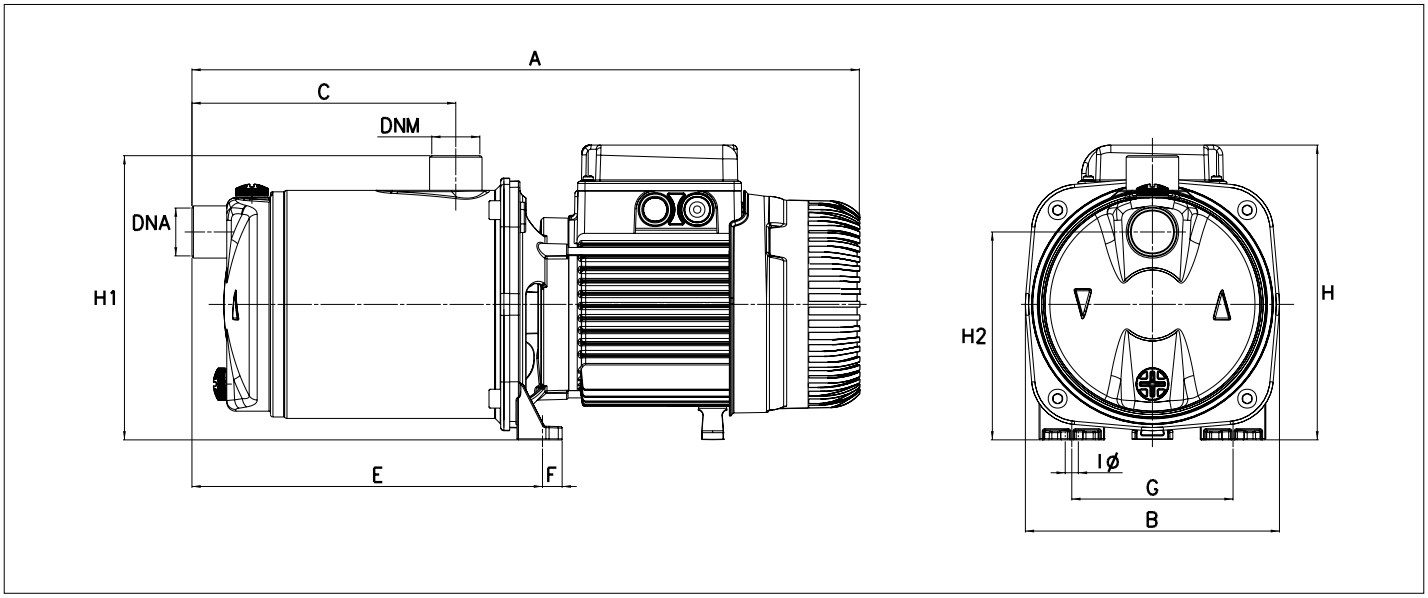

MODEL	units	A	B	C	E	F	G	IØ 4 Holes	H	H1	H2	DNA (NPT)	DNM (NPT)	PACKING DIMENSIONS			WEIGHT	Q.TY x PALLET
														L/A	L/B	H		
EUROINOX 30/306 M	inches	17.3	6.9	6.5	9.5	0.5	4.4	0.4	7.6	7.7	5.6	1"	1"	18.9	8.3	10.4	25.8 lbs	28
	mm	439	174	166	241	13,5	111	9	193	196	143			480	212	265	11.7 kg	
EUROINOX 40/306 M	inches	17.3	6.9	6.5	9.5	0.5	4.4	0.4	7.6	7.7	5.6	1"	1"	18.9	8.3	10.4	26.2 lbs	28
	mm	439	174	166	241	13,5	111	9	193	196	143			480	212	265	11.9 kg	
EUROINOX 30/506 M	inches	15.1	6.9	4.3	7.3	0.5	4.4	0.4	7.6	7.7	5.6	1"	1"	17.3	8.1	9.6	23.1 lbs	28
	mm	384	174	108	186	13,5	111	9	193	196	143			440	206	245	10.5 kg	
EUROINOX 40/506 M	inches	18	6.9	6.5	9.5	0.5	4.4	0.4	8	7.7	5.6	1"	1"	18.9	8.3	10.4	32.2 lbs	28
	mm	458	174	166	241	13,5	111	9	203	196	143			480	212	265	14.6 kg	
EUROINOX 50/506 M	inches	18	6.9	6.5	9.5	0.5	4.4	0.4	8	7.7	5.6	1"	1"	18.9	8.3	10.4	33.3 lbs	28
	mm	458	174	166	241	13,5	111	9	203	196	143			480	212	265	15.1 kg	
EUROINOX 25/806 M	inches	15.1	6.9	4.3	7.3	0.5	4.4	0.4	7.6	7.7	5.6	1"	1"	17.3	8.1	9.6	23.1 lbs	28
	mm	384	174	108	186	13,5	111	9	193	196	143			440	206	245	10.5 kg	
EUROINOX 30/806 M	inches	18	6.9	6.5	9.5	0.5	4.4	0.4	8	7.7	5.6	1"	1"	18.9	8.3	10.4	32.2 lbs	28
	mm	458	174	166	241	13,5	111	9	203	196	143			480	212	265	14.6 kg	
EUROINOX 40/806 M	inches	18	6.9	6.5	9.5	0.5	4.4	0.4	8	7.7	5.6	1"	1"	18.9	8.3	10.4	33.3 lbs	28
	mm	458	174	166	241	13,5	111	9	203	196	143			480	212	265	15.1 kg	

DAB PUMPS reserves the right to make modifications without notice

K

SINGLE IMPELLER CENTRIFUGAL PUMPS



K 35/1200 T

Single impeller centrifugal pump suitable for domestic, civil, industrial and agricultural installations and for decanting, mixing and irrigating uses. Cast iron pump body and motor support. Technopolymer impeller. Stainless steel driving shaft. Carbon/ceramic mechanical seal. Asynchronous, closed motor, cooled by external ventilation. Built-in thermal and current overload protection and a capacitor permanently on in the single-phase version. For the protection of the three-phase motor it is advisable to use a suitable overload protection complying with the regulations in force.

Operating range from 7.9 to 422.7 gpm (1.8 to 96 m^3/h) with head up to 203 ft (62 m)

Pumped liquid characteristics clean, free from solids or abrasive substances, non-viscous, non-aggressive, non-crystallised, chemically neutral and close to the characteristics of water

Liquid temperature range from 14°F to +122°F (-10°C to +50°C)

Maximum operating range 87 psi

Maximum ambient temperature +104 F (+40°C)

Protection level IP 44

Terminal board protection level IP 55

Insulation class F

C US

TECHNICAL DATA

MODEL	CODE	ELECTRICAL DATA						
		VOLTAGE 60 Hz	P1 MAX kW	P2 NOMINAL		In A	CAPACITOR	
				kW	HP		µF	Vc
K 20/41 M	60113967	1x115/230 V~	0.8	0.37	0.5	6.7-3.5	40	250
K 30/70 M	60113968	1x115/230 V~	1.5	0.75	1	14.5-7.35	80	450
K 30/100 M	102115640	1x220-230 V~	1.72	1.1	1.5	8-7.6	31.5	450
K 36/100 M	102115700	1x220-230 V~	2.1	1.85	2.5	9.4-9	40	450

K

SINGLE IMPELLER CENTRIFUGAL PUMPS

RANGE PERFORMANCE

K 20/41

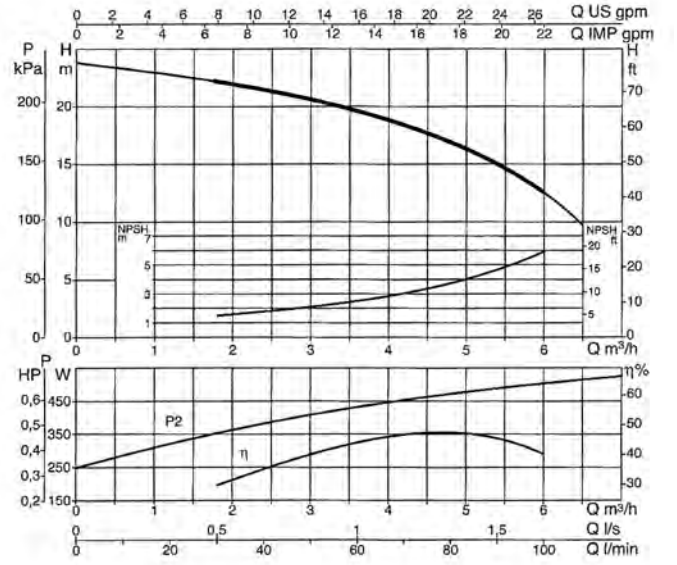

K 30/70

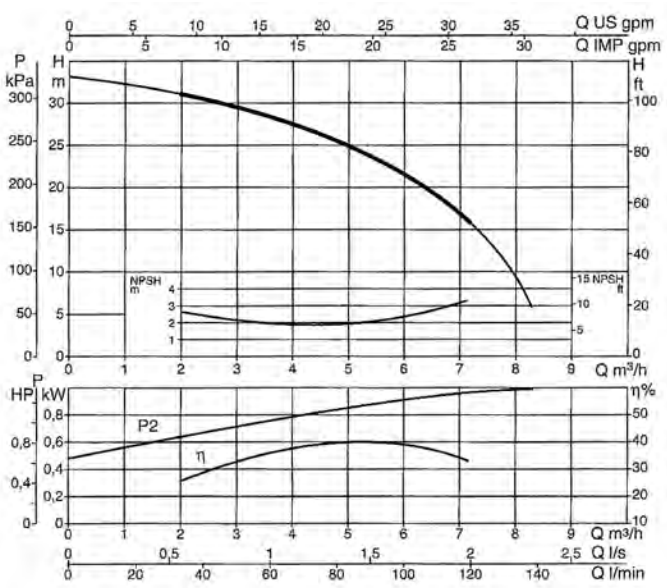

K 30/100

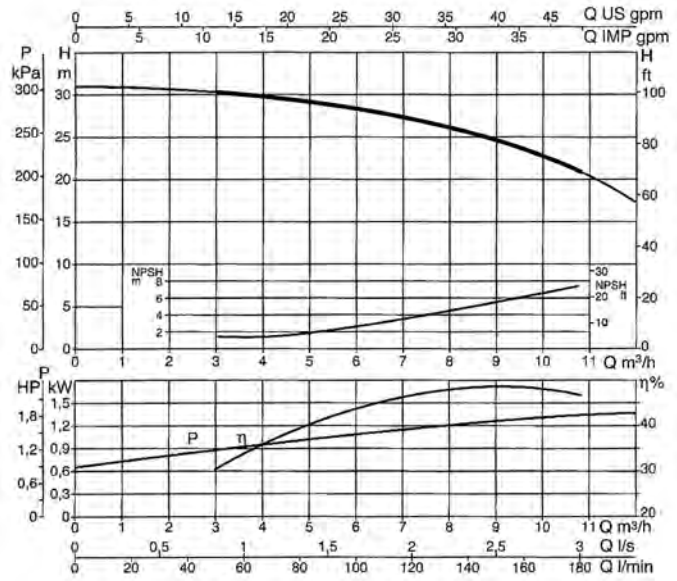

K 36/100

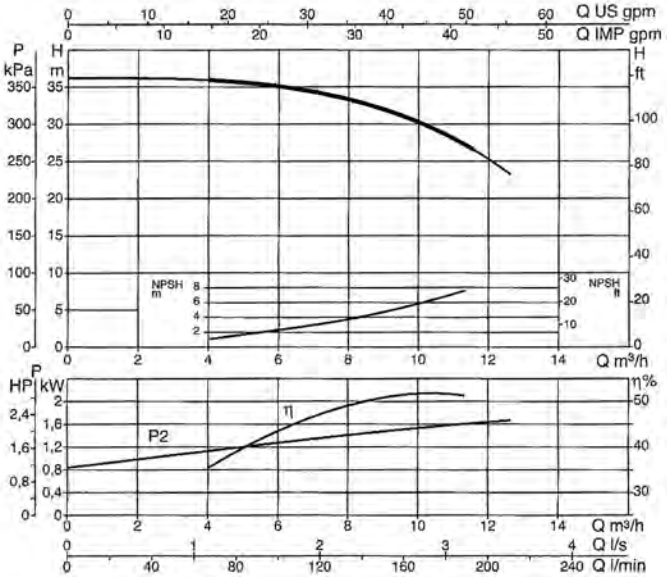

MODEL	P2 NOMINAL		Q = gpm	0	7.9	10.6	15.8	21.1	26. 4	31.7	39.6	42.2	46.2	52.8
	kW	HP	Q = l/min	0	30	40	60	80	100	120	150	160	180	200
K 20/41 M *	0.37	0.5	H (ft)	77	71	69	62	53	40	15				
			H (m)	23.4	21.5	21.0	19.0	16.3	12.2	4.5				
K 30/70 M	1.5	0.75	H (ft)	108	102	100	94	87	75	62				
			H (m)	33	31.1	30.5	28.8	26.5	23.0	19.0				
K 30/100 M	1.1	1.5	H (ft)	100		98	95	93	90	86	74	70	59	37
			H (m)	30.5		29.9	29.0	28.4	27.5	26.2	22.5	21.2	18.0	11.2
K 36/100 M	1.85	2.5	H (ft)	117		116	115	114	111	106	98	94	85	70
			H (m)	35.6		35.4	35.0	34.6	33.8	32.4	30.0	28.8	26.0	21.3

* pump not suitable for domestic application

K

SINGLE IMPELLER CENTRIFUGAL PUMPS

DIMENSIONS AND WEIGHTS

K 20/41 - 30/70

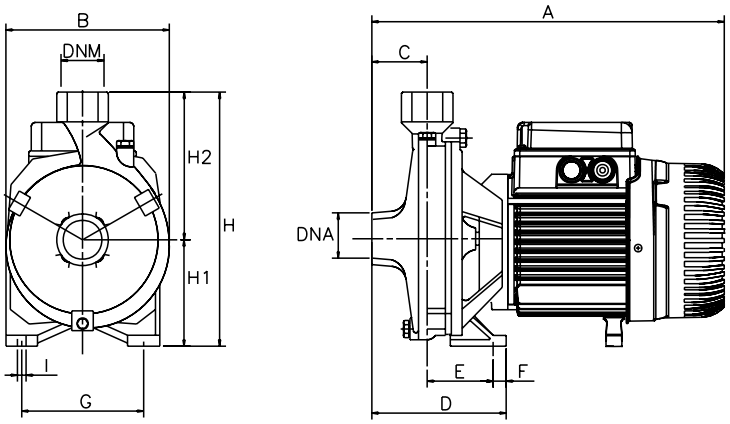

K 30/100 - 36/100

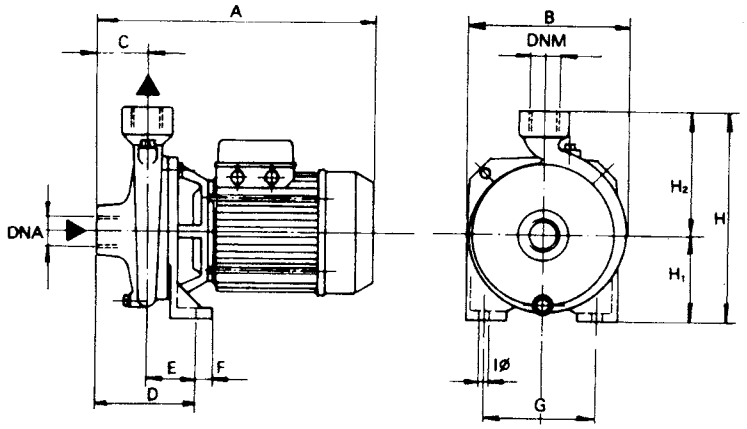

MODEL	units	A	B	C	D	E	F	G	I Ø	H	H1	H2	DNA	DNM	PACKAGING DIMENSIONS			VOLUME	WEIGHT	Q.TY x PALLET
													NPT	NPT	L/A	L/B	H			
K 20/41 M	inches	11.8	6.3	2	3.9	2	0.6	4.3	0.4	8.1	3.3	4.7	1"	1"	13.1	8	10.1	0.8 ft³	22.3 lbs	39
	mm	300	160	50	100	50	15	110	9	205	85	120			332	202	257	0.024 m³	10.1 kg	
K 30/70 M	inches	11.8	7.3	2	4.3	2.3	0.6	5.5	0.4	9.3	3.9	5.3	1"	1"	9.1	9.1	10.3	0.8 ft³	32.6 lbs	30
	mm	300	185	50	108	58	15	140	9	235	100	135			232	232	262	0.024 m³	14.8 kg	
K 30/100 M	inches	13.1	7.9	2	4.5	2.5	0.6	5.5	0.4	10	4.1	5.9	1"1/2	1"	16.8	9.7	12.1	1.1 ft³	40.8 lbs	21
	mm	333	200	50	114	64	15	140	9	255	105	150			427	246	307	0.032 m³	18.5 kg	
K 36/100 M	inches	13.1	7.9	2	4.5	2.5	0.6	5.5	0.4	10	4.1	5.9	1"1/2	1"	16.8	9.7	12.1	1.1 ft³	43.4 lbs	21
	mm	333	200	50	114	64	15	140	9	255	105	150			427	246	307	0.032 m³	19.7 kg	

K

TWIN IMPELLERS CENTRIFUGAL PUMPS



K 35/40 M

Twin impeller centrifugal pump designed for use in pressurisation units for water supply systems for domestic, civil and industrial use. Suitable for sprinkling irrigation and other water supply applications. Cast iron pump body and motor support. Technopolymer impeller. Stainless steel driving shaft. Carbon/ceramic mechanical seal. Asynchronous, closed motor, cooled by external ventilation. Built-in thermal and current overload protection and a capacitor permanently on in the single-phase version. For the protection of the three-phase motor it is advisable to use a suitable overload protection complying with the regulations in force.

Operating range from 5.3 to 132.1 gpm (1.2 to 30 m^3/h) with head up to 318 ft (97 m)

Pumped liquid characteristics clean, free from solids or abrasive substances, non-viscous, non-aggressive, non-crystallised, chemically neutral and close to the characteristics of water

Liquid temperature range
from 14°F to +122°F (-10°C to +50°C)

Maximum operating range
K 35/40, K 35/100, K 40/100: **87 psi (6 bar)**
K 45/50: **116 psi (8 bar)**

Maximum ambient temperature +104 F (+40°C)

Protection level IP 44

Terminal board protection level IP 55

Insulation class F

C US

TECHNICAL DATA

MODEL	CODE	ELECTRICAL DATA						
		VOLTAGE 60 Hz	P1 MAX kW	P2 NOMINAL		In A	CAPACITOR	
				kW	HP		µF	Vc
K 35/40 M	TBD	1x115/230 V~	1.3	0.75	1	11.5- 5.5	80	450
K 45/50 M	102125620	1x220-230 V~	2.02	1.1	1.5	9.1- 8.7	31.5	450
K 35/100 M	102121670	1x220-230 V~	1.56	1.1	1.5	7- 6.6	31.5	450
K 40/100 M	102125740	1x220-230 V~	2	1.85	2.5	9.6- 9.2	40	450

DAB PUMPS reserves the right to make modifications without notice

K

TWIN IMPELLERS CENTRIFUGAL PUMPS

RANGE PERFORMANCE

K 35/40

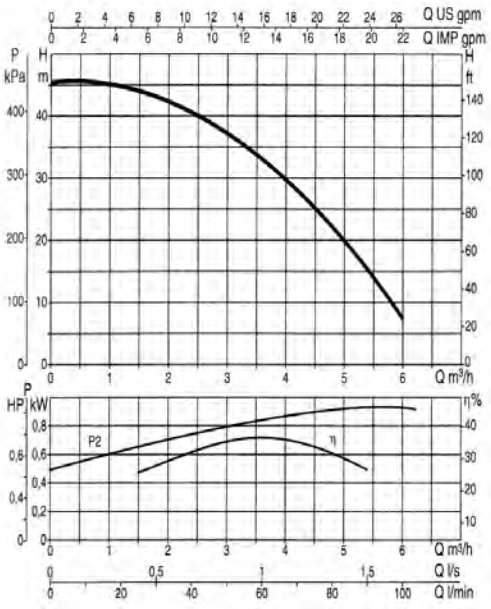

K 45/50

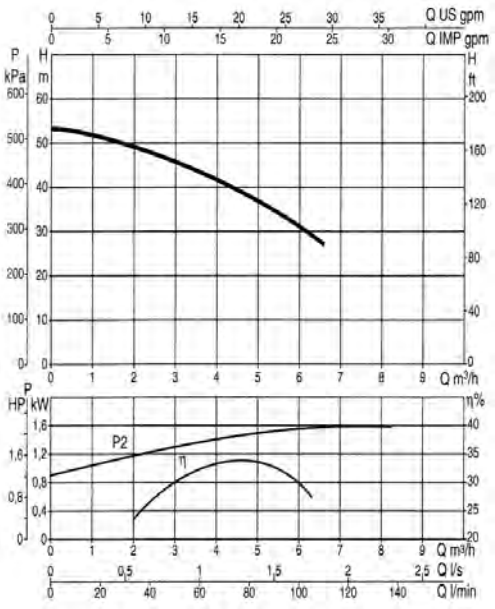

K 35/100

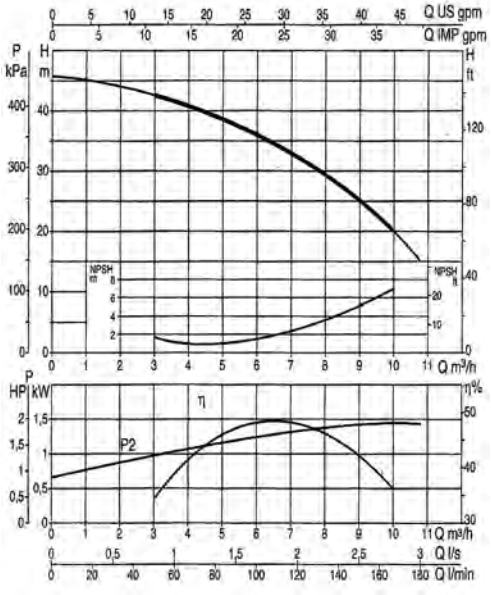

K 40/100

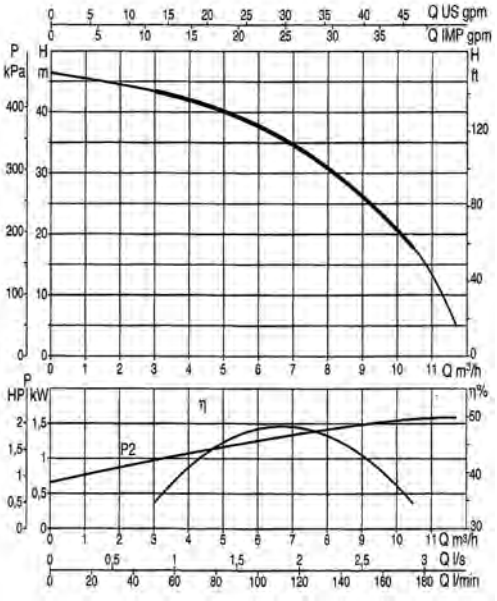

MODEL	P2 NOMINAL		Q = gpm	0	1.3	2.6	4	5.3	7.9	10.6	15.8	21.1	26.4	31.7	39.6	42.2	10.5	12
	kW	HP	Q = l/min	0	5	10	15	20	30	40	60	80	100	120	150	160	180	200
K 35/40 M	0.75	1	H (ft)	147				138	133	125	104	73	16					
			H (m)	44.9				42.2	40.5	38.1	31.8	22.4	5					
K 45/50 M	1.1	1.5	H (ft)	174				167	163	157	140	121	102	59				
			H (m)	53.1				51	49.8	48	42.6	37	31	17.9				
K 35/100 M	1.1	1.5	H (ft)	123						118	113	105	95	81	54	44	13.1	
			H (m)	37.4						36	34.5	32	29	24.6	16.6	13.5	4.0	
K 40/100 M	1.85	2.5	H (ft)	150						148	144	136	128	116	93	82	18.1	15.1
			H (m)	45.7						45	43,8	41,5	39	35,3	28,3	25	18,1	4,6

K

TWIN IMPELLERS CENTRIFUGAL PUMPS

DIMENSIONS AND WEIGHTS

K 35/40

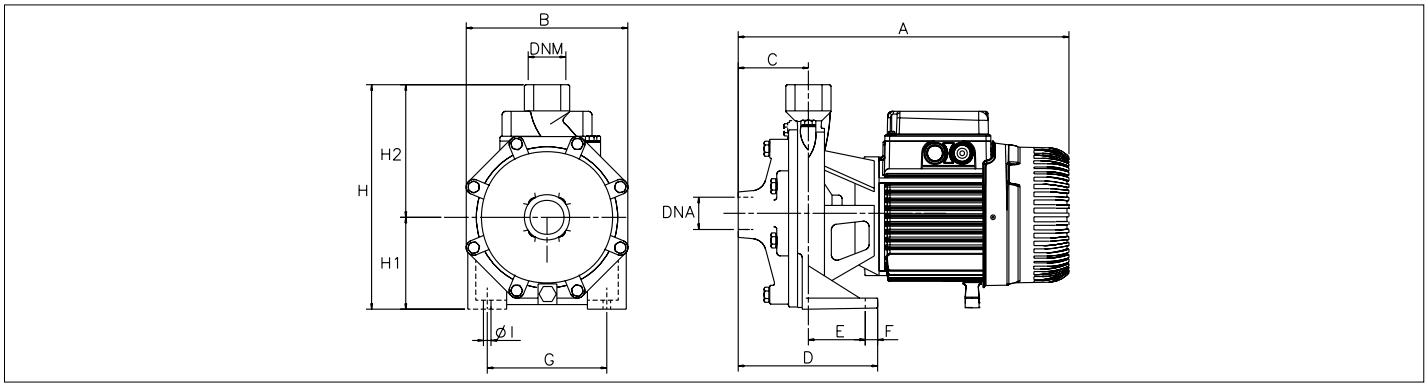

K 45/50

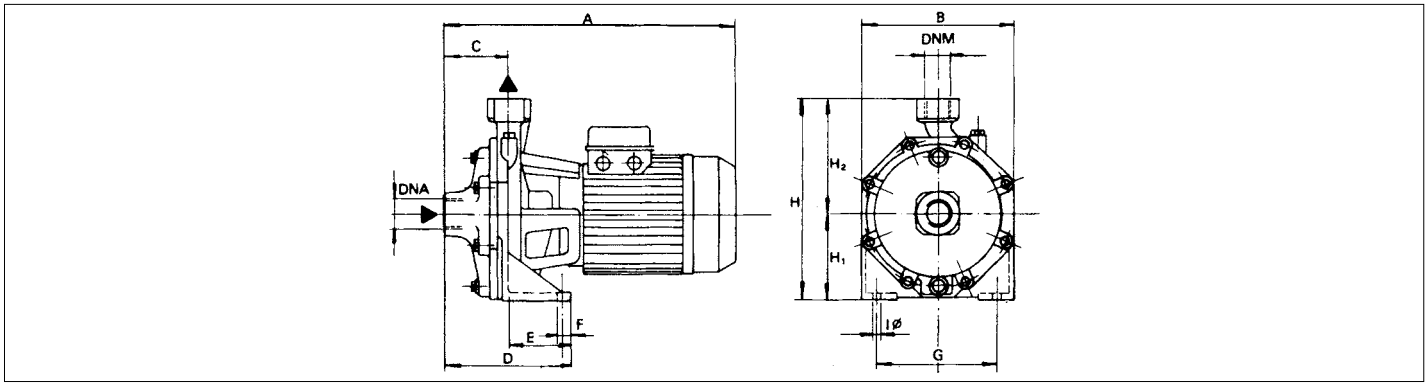

K 35/100

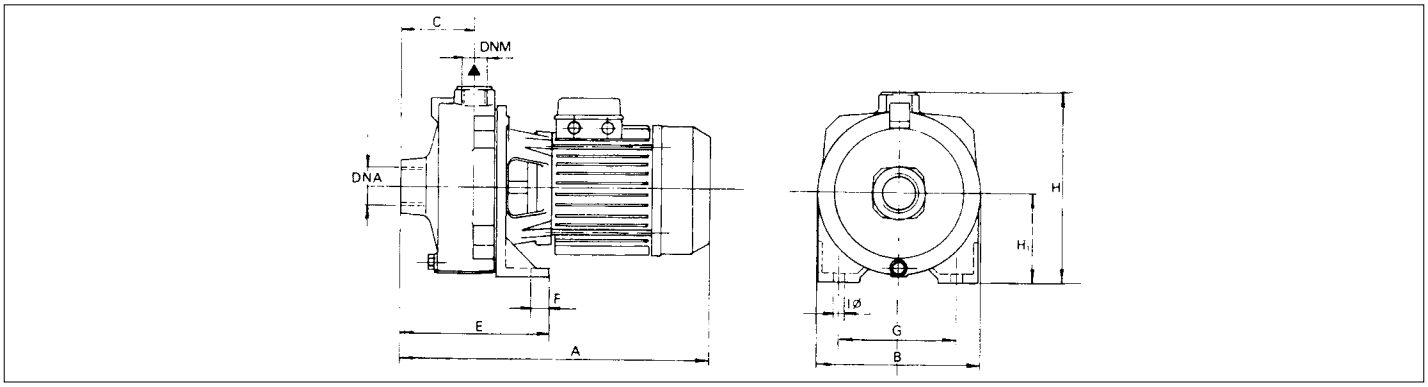

MODEL	units	A	B	C	D	E	F	G	I Ø	H	H1	H2	DNA NPT	DNM NPT	PACKAGING DIMENSIONS			VOLUME	WEIGHT	Q.TY x PALLET
															L/A	L/B	H			
K 35/40 M	inches	14.3	8.5	3	5.8	2.8	0.6	5.8	0.4	9.3	3.9	5.3	1"	1"	15.4	9.1	14.3	0.8 ft³	35.9 lbs	27
	mm	363	217	76	148	72	15	148	9,5	235	100	135			392	232	362	0.024 m³	16.3 kg	
K 45/50 M	inches	14.6	12.2	3	5.7	2.7	0.6	6.5	0.5	10.6	4.6	5.9	1 1/4"	1"	16.8	9.7	11.7	1.1 ft³	51.4 lbs	21
	mm	370	310	75	144	69	15	165	11.5	268	118	150			427	246	297	0.031 m³	23.3 kg	
K 35/100 M	inches	15.2	8.1	3.5	-	7	0.8	5.7	0.4	9.2	4.3	4.9	1 1/2"	1"	16.8	9.7	11.7	1.1 ft³	47.4 lbs	21
	mm	387	205	88	-	179	20	145	11	233	108	125			427	246	297	0.031 m³	21.5 kg	
K 40/100 M	inches	18.1	8.1	3.5	-	7	0.8	5.7	0.4	9.2	4.3	4.9	1 1/2"	1"	20.6	9.7	11.7	1.1 ft³	50.7 lbs	18
	mm	461	205	88	-	179	20	145	11	233	108	125			522	246	297	0.031 m³	23.0 kg	

DP

PUMPS FOR DEEP SUCTION



DP 82-102



DP 150-200

Self-priming centrifugal pump for suction up to 89 ft, (27 m) reached by means of an ejector.
Cast iron pump body and motor support.
Technopolymer impeller and diffusers.
Stainless steel adjustment rings. Carbon / ceramic mechanical seal. Cast iron ejector body, technopolymer Venturi tube and brass nozzle. Asynchronous motor closed and cooled by external ventilation.
Built-in thermal current overload protection and a capacitor permanently on in the single-phase version. For the protection of the three-phase motor it is advisable to use a suitable overload protection complying with the regulations in force.

Operating range
from 0.7 to 18.9 gpm (0.15 to 4.3 m^3/h)

Liquid temperature range
from 32°F to +104°F (0°C to +40°C) for other uses
from 32°F to +95°F (0°C to +35°C) for domestic use

Pumped liquid characteristics clean, free from solids or abrasive substances, non-viscous, non-aggressive, non-crystallised and chemically neutral.

Maximum ambient temperature +104°F (+40°C)

Maximum working pressure
87 psi (6 bar) for DP 82 - DP 102
116 psi (8 bar) for DP 151 - DP 251

Protection level IP 44

Insulation class F

C US

ACCESSORIES
PAG. 61

TECHNICAL DATA

MODEL	CODE	ELECTRICAL DATA						
		VOLTAGE 60 Hz	P1 MÁX kW	P2 NOMINAL		In A	CAPACITOR	
				kW	HP		µF	Vc
DP 82 M	60119487	1x115/230 V~	0.9	0.6	0.8	7.09-3.61	50	450
DP 102 M	60119488	1x115/230 V~	1.12	0.75	1	9.2-4.67	50	450
DP 150	102166341	1x220-230 V~	1.7	1.1	1.5	7.6	31.5	450
DP 200	102166351	1x220-230 V~	1.9	1.82	2	8.5	40	450

DP

PUMPS FOR DEEP SUCTION

RANGE PERFORMANCE

HYDRAULIC DATA (n ~ 2800 r.p.m.)																			
MODEL	P2 NOMINAL		EJECTOR TYPE	SUCTION DEPTH.			Discharge pressure												
						psi	22	29	36	44	51	58	65	73	80	87	94	102	
	kW	HP		ft	m	bar	1.5	2	2.5	3	3.5	4	4.5	5	5.5	6	6.5	7	
							Flow rate table												
DP 82 M	0.6	0.8	E 25	30	9	gpm	8	4.8	2	0.1									
						l/h	1813	1080	446	33									
				39	12	gpm	6.3	1											
						l/h	1426	225											
				49	15	gpm	4	1.4											
						l/h	900	326											
			E 30	30	9	gpm	7.7	5.7	3.6	2.3	1.1	0.1							
						l/h	1753	1286	812	524	261	12							
				39	12	gpm	5.9	4.2	2.7	1.4	0.7	0							
						l/h	1345	965	608	329	162	0							
				49	15	gpm	5.1	3.4	2.0	1.0	0.2								
						l/h	116	761	452	228	45								
DP 102 M	0.75	1	E 25	30	9	gpm	10.5	7.7	4.8	2.3	0.6								
						l/h	2386	1756	1097	515	126								
				39	12	gpm	8.5	5.2	2.4	0.4									
						l/h	1930	1190	536	87									
				49	15	gpm	6.4	3.4	1.1										
						l/h	1459	773	252										
			E 30	39	12	gpm		5.5	3.8	2.5	1.4	0.7							
						l/h		1240	872	566	329	156							
				49	15	gpm		4.5	3.1	2.0	1.1	0.4							
						l/h		1028	701	449	255	96							
				59	18	gpm		3.5	2.3	1.3	0.7	0.1							
						l/h		785	527	302	150	15							
				69	21	gpm		2.8	1.6	0.8	0.2								
						l/h		635	374	180	39								
DP 150	1.1	1.5	E 20	30	9	gpm				15.3	12.7	9.8	6.6	3.3					
						l/h				3470	2890	2220	1500	750					
				39	12	gpm				13.7	11.1	8.1	4.8	1.3					
						l/h				3110	2510	1850	1100	300					
				49	15	gpm				11.9	9.2	6.1	2.8						
						l/h				2710	2100	1380	640						
				59	18	gpm				10.4	7.5	4.2							
						l/h				2360	1700	950							
			E 25	49	15	gpm				12.3	10.3	8.1	5.9	4.0	2.3				
						l/h				2800	2330	1830	1350	900	520				
				59	18	gpm				11.1	9.0	6.8	4.8	3.0	1.3				
						l/h				2530	2050	1550	1090	680	300				
				69	21	gpm				10	7.9	5.7	3.8	2.1					
						l/h				2280	1800	1300	860	470					
			E 30	69	21	gpm				8	7.3	6.2	5.1	4	3.1	2.3			
						l/h				1820	1650	1410	1160	910	700	520			
				79	24	gpm				7.4	6.7	5.5	4.5	3.4	2.6	1.8			
						l/h				1680	1520	1260	1020	780	580	420			
				89	27	gpm				6.8	6	4.9	3.9	3	2.2	1.5			
						l/h				1550	1360	1110	880	680	490	330			
DP 200	1.85	2	E 20	30	9	gpm				18.9	15.9	12.8	9.6	6.2	2.8				
						l/h				4300	3600	2900	2180	1400	640				
				39	12	gpm				16.5	13.8	11.2	7.5	4.1					
						l/h				3750	3140	2540	1700	940					
				69	15	gpm					12.2	9	5.7	2.2					
						l/h					2780	2040	1300	500					
				79	18	gpm					10.3	7.1	3.6						
						l/h					2340	1610	820						
			E 25	49	15	gpm					12.9	10.6	8.4	6.2	4.2	2.8			
						l/h					2920	2400	1900	1400	950	570			
				59	18	gpm					11.4	9.3	7.1	5.1	3.2	1.6			
						l/h					2600	2110	1620	1150	720	360			
				69	21	gpm					10.3	8.1	5.9	4	2.2				
						l/h					2350	1850	1350	900	510				
				79	24	gpm					9	6.8	4.8	2.9	1.3				
						l/h					2050	1550	1080	660	300				
			E 30	69	21	gpm						7.5	6.5	5.4	4.3	3.4	2.6	1.8	
						l/h						1710	1480	1220	980	770	590	420	
				79	24	gpm						7	5.9	4.8	3.7	2.9	2.2	1.5	
						l/h						1580	1330	1080	850	670	490	330	
				89	27	gpm						6.3	5.3	4.2	3.3	2.5	1.8	1.1	
						l/h						1440	1200	950	750	560	400	250	

DAB PUMPS reserves the right to make modifications without notice

DP

PUMPS FOR DEEP SUCTION

DIMENSIONS AND WEIGHTS

DP 82-102

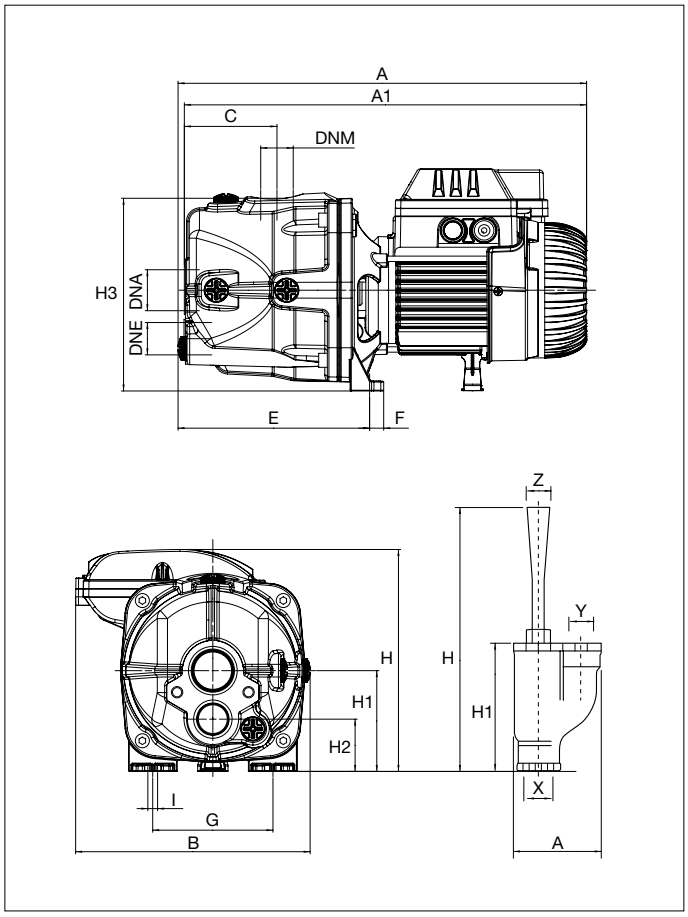

DP 150-200 Transformable

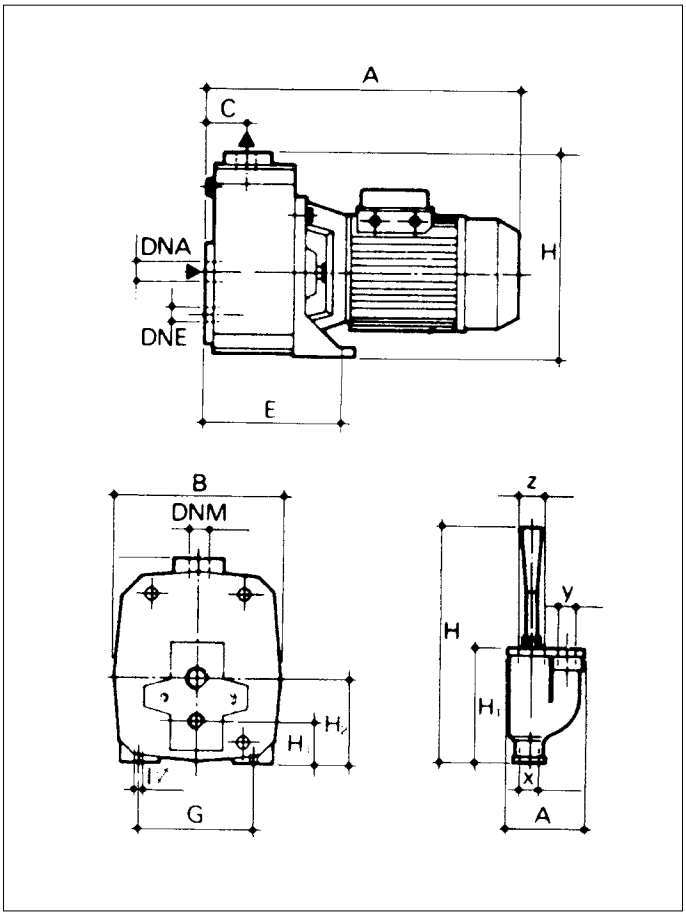

MODEL	Units	A	A1	B	C	E	G	I Ø	H	H1	H2	H3	I	DNA (NPT)	DNM (NPT)	DNE (NPT)	EJECTOR						PACKING DIMENSIONS			Q.TY x PALLET
																	A	H	H1	Ø (NPT) x	Ø (NPT) y	Ø (NPT) z	L/A	L/B	H	
DP 82 M	inches	14.8	14.6	6.9	3.4	7	4.4	-	7.6	3.7	1.9	7	0.4	1 1/4"	1"	1"	3.8	11.6	5.6	1"	1"	1 1/4"	18.9	9.4	9.4	22
	mm	377	371	175	86	177	111	–	194	94	49	179	9				97	295	143				480	240	240	
DP 102 M	inches	15.7	15.4	6.9	3.4	7	4.4	-	8	3.7	1.9	7	0.4	1 1/4"	1"	1"	3.8	11.6	5.6	1"	1"	1 1/4"	18.9	9.4	9.4	22
	mm	398	392	175	86	177	111	–	203	94	49	179	9				97	295	143				480	240	240	
DP 150	inches	15.3	-	8.3	2	7.8	5.7	0.4	6.1	2	4.3	-	-	1 1/4"	1"	1"	3.8	11.6	5.6	1"	1"	1 1/4"	24.1	9.8	11	22
	mm	388	–	210	50	197	145	11	155	52	108	–	–				97	295	143				612	248	279	
DP 200	inches	18.2	-	8.3	2	7.8	5.7	0.4	6.1	2.1	4.3	-	-	1 1/4"	1"	1"	3.8	11.6	5.6	1"	1"	1 1/4"	25.9	9.8	11	22
	mm	462	–	210	50	197	145	11	155	53	108	–	–				97	295	143				657	248	279	

DP

PUMPS FOR DEEP SUCTION

INSTRUCTION FOR CONVERTION

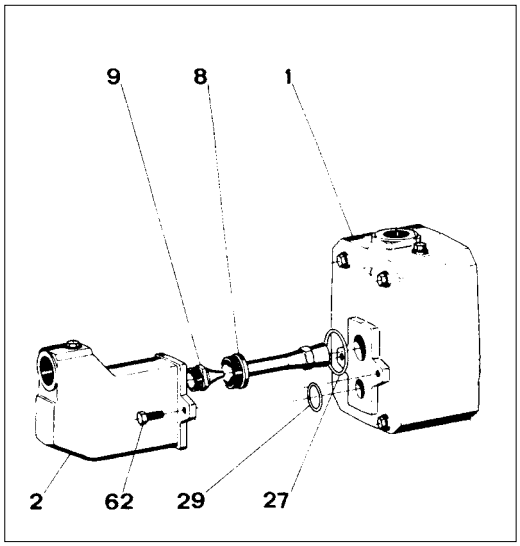

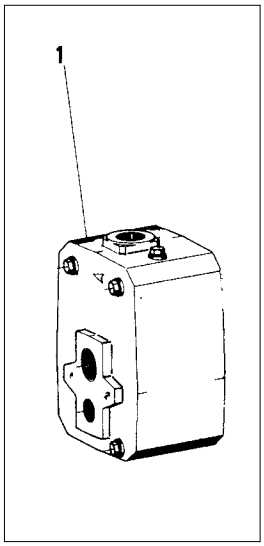

Conversion from DP 150-200 to JET 150-200
Screw the nozzle (9) into place on the ejector's body (2) and the Venturi tube (8). Put the O-rings (27) and (29) in their respective places and fix the ejector body (2) to the pump body (1) using the two screws (62).

Conversion from JET 150-200 to DP 150-200
Loosen and remove the two screws (62) connecting the ejector body (2) to the pump body (1).
Save the O-rings (27) and (29), the Venturi tube (8) and the nozzle (9).

ACCESSORIES - *EJECTORS*

MODEL	CODE	DIMENSION inch	WEIGHT lbs	Q.TY x PALLET
EJECTOR E 20	109205000	3 X 4 X 11	8	N/A
EJECTOR E 25	109205020	3 X 4 X 11	8	N/A
EJECTOR E 30	109205010	3 X 4 X 11	8	N/A



NOTES

INDEX - SUBMERSIBLE PUMPS AND MOTORS



BHP 750 / 1000
4" SUBMERSIBLE PUMPS
PAGE 64



S4
4" SUBMERSIBLE ELECTRIC PUMPS
PAGE 66



4TW
SUBMERSIBLE MOTOR 4"
PAGE 87



4GG
SUBMERSIBLE MOTOR 4"
PAGE 89



4GX
SUBMERSIBLE MOTOR 4"
PAGE 92



6GF
SUBMERSIBLE MOTOR 6"
PAGE 95



TR8
SUBMERSIBLE MOTOR 8"
PAGE 98



TR10
SUBMERSIBLE MOTOR 10"
PAGE 101



TR12
SUBMERSIBLE MOTOR 12"
PAGE 104



TR14
SUBMERSIBLE MOTOR 14"
PAGE 107



DIVER 6
SUBMERSIBLE MULTI-IMPELLER PUMPS
PAGE 110



DTRON 2
7" ELECTRONIC MULTISTAGE SUBMERSIBLE PUMPS
PAGE 112



DTRON 3
7" ELECTRONIC MULTISTAGE SUBMERSIBLE PUMPS
PAGE 114

ACCESSORIES
PAGE 117

BHP 750 / 1000

4” SUBMERSIBLE PUMPS



4” multi-impeller submersible pumps designed for pressurization, gardening and irrigation, withdraw water from underground in domestic and residential, civil and commercial areas and irrigation systems also in agriculture.

Flow rate up to 26 gpm (6 m^3/h)

Head up to 180 ft (55 m)

Maximum immersion depth 49 ft (15 m)

Type of pumped liquid clean, free of solids and abrasive substances, non-viscous, non-aggressive, non-crystallized and chemically neutral

Liquid temperature from 32°F to 104°F (+0°C to +40°C)

Maximum operating pressure 116 psi (8 bar)

Pump maximum diameter 3.9” (99 mm)

Single phase power input 1x115v60Hz / 1x230v60Hz

Power cable and plug 10 ft (3 m)

Possible type of installation fixed in vertical position

Certification CSA Standard C22.2 No. 108-14; UL 778

C US

TECHNICAL DATA

MODEL	CODE	ELECTRICAL DATA			
		VOLTAGE 60 Hz	P1 MAX kW	In MAX A	CAPACITOR
BHP 750 HP 115V 60 HZ	60201432	115 V	0.9	8.5	35µF ; V250
BHP 750 HP 230V 60 HZ	60201434	230 V	0.9	4	16µF ; V450
BHP 1000 115V 60 HZ	60201433	115 V	1.2	11.5	40µF ; V250
BHP 1000 230V 60 HZ	60201435	230 V	1.2	5.5	16µF ; V450

BHP 750 / 1000

4” SUBMERSIBLE PUMPS

RANGE PERFORMANCE

MODEL	HYDRAULIC DATA									
	Q= GPM	0	4	8	12	16	20	22	24	27
	Q= m³/h	0	0.9	1.8	2.7	3.6	4.5	5	5.5	6.1
BHP 750 HP 115V 60 HZ	H (ft)	177	156	132	99	50	3			
	H (m)	54	48	40	30	15	1			
BHP 750 HP 230V 60 HZ	H (ft)	177	156	132	99	50	3			
	H (m)	54	48	40	30	15	1			
BHP 1000 115V 60 HZ	H (ft)	180	165	150	135	105	70	48	30	3
	H (m)	55	50	46	41	32	21	15	9	1
BHP 1000 230V 60 HZ	H (ft)	180	165	150	135	105	70	48	30	3
	H (m)	55	50	46	41	32	21	15	9	1

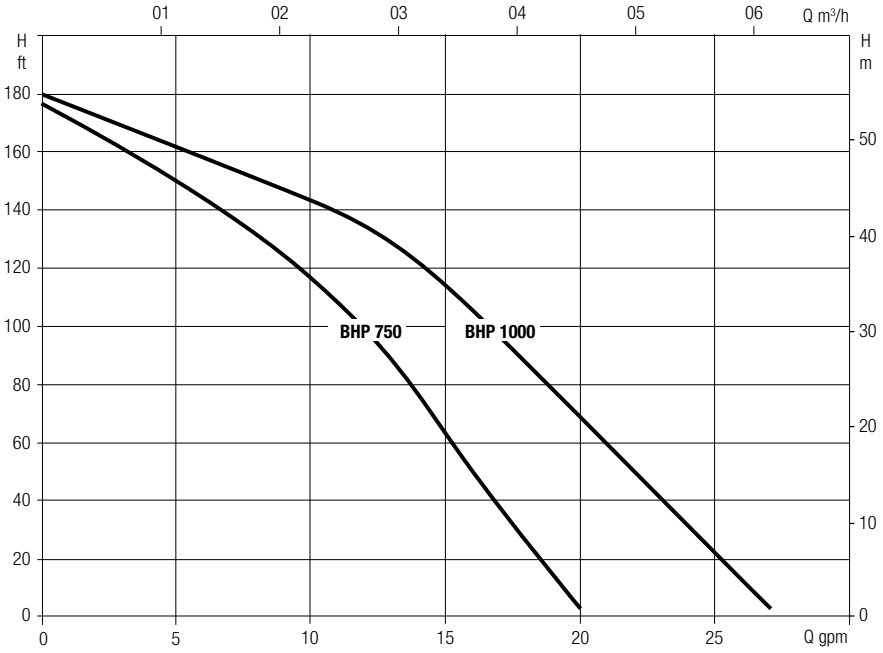

Curve tolerance according to ISO 9906.

DIMENSIONS

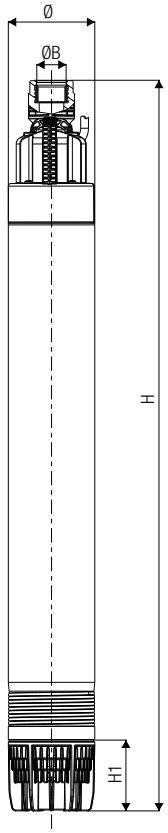

DIMENSIONS AND WEIGHTS

MODEL	units	Ø	ØB inch	H	H1	PACK DIMENSIONS			WEIGHT
						L/A	L/B	H	
BHP 750 HP 115V 60 HZ	inches	3.9	1"NPT F	32.6	3.1	36	6.3	6.3	28.7 lbs
	mm	99	1" NPT F	828	78,7	914	160	160	13 kg
BHP 750 HP 230V 60 HZ	inches	3.9	1"NPT F	32.6	3.1	36	6.3	6.3	28.7 lbs
	mm	99	1" NPT F	828	78,7	914	160	160	13 kg
BHP 1000 115V 60 HZ	inches	3.9	1"NPT F	32.6	3.1	36	6.3	6.3	28.7 lbs
	mm	99	1" NPT F	828	78,7	914	160	160	13 kg
BHP 1000 230V 60 HZ	inches	3.9	1"NPT F	32.6	3.1	36	6.3	6.3	28.7 lbs
	mm	99	1" NPT F	828	78,7	914	160	160	13 kg

DAB PUMPS reserves the right to make modifications without notice

S4

4" SUBMERSIBLE ELECTRIC PUMPS

SAND RESISTANT



4" multi-impeller borehole pumps for clean water, designed for water boosting, gardening and irrigation, lifting water from boreholes in residential building service, commercial building service and irrigation systems also for agriculture. The S4 pumps must be installed in wells with a diameter of at least 4", or in tanks or cisterns and it increases the pressure of water that can be used for example to water medium or large gardens or (in the case of models with a greater flow and head) in irrigation systems in agriculture.

Available as standard:
- Only pump end
- Pump body with water-filled motor 2WIRE
- Pump body with water-filled motor 3WIRE

Flow rate up to 120 GPM (27 m^3/h)

Head up to 1500 ft (457 m)

Maximum immersion depth 4GG -4TW: 984 ft (300 m)

Type of pumped liquid clean, free of solids and abrasive substances, non-viscous, non-aggressive, non-crystallized and chemically neutral

Sand quantity 5.42 lb/in^3 (150 g/m^3)

Liquid temperature from 32°F to 104°F (0°C to +40°C)

Output connection
S4 5-25: 1" 1/4 NPT
S4 35-90: 2" NPT

Pump maximum diameter 3.9 in

Impeller/s material technopolymer

Maximum number of starts IP 68

Protection class 20/h

Motor insulation class F

Single phase power input
1x115 V 60Hz / 1x230 V 60 Hz

Three phase power input
3x230 V 60 Hz / 3x460 V 60 Hz / 3x 575V 60Hz

Possible type of installation fixed in vertical position. Horizontal installation is possible, it is recommended to install a cooling sleeve

Special versions on request different voltages, different cable lengths, version with 4GX

Certification pump end NSF61 certificate is pending approval.
4GG - 4TW motor: CSA approved

C US

TECHNICAL DATA - *S4 5*

MODEL	2 WIRE	3 WIRE	PUMP END	VOLTAGE	ASSEMBLED VERSION	MOTOR TYPE	P2 HP	STAGES
	CODE	CODE	CODE					
S4 5/05			60198611	-	-	NO MOTOR	0.5	11
	60198632	60198655		115	YES*	4TW 2W		
						4GG 3W		
	60198636	60198659		230	YES*	4TW 2W		
						4GG 3W		
S4 5/07			60198612	-	-	NO MOTOR	0.75	15
	60198637	60198660		230	YES*	4TW 2W		
						4GG 3W		
S4 5/10			60198613	-	-	NO MOTOR	1	18
	60198638	60198661		230	YES*	4TW 2W		
						4GG 3W		
S4 5/15			60198614	-	-	NO MOTOR	1.5	25
	60198639	60198662		230	YES*	4TW 2W		
						4GG 3W		
S4 5/20	-	-	60196210	-	-	NO MOTOR	2	31

* assembled version available with canned motor 4GG and 4TW

S4 5

4" SUBMERSIBLE ELECTRIC PUMPS

RANGE PERFORMANCE

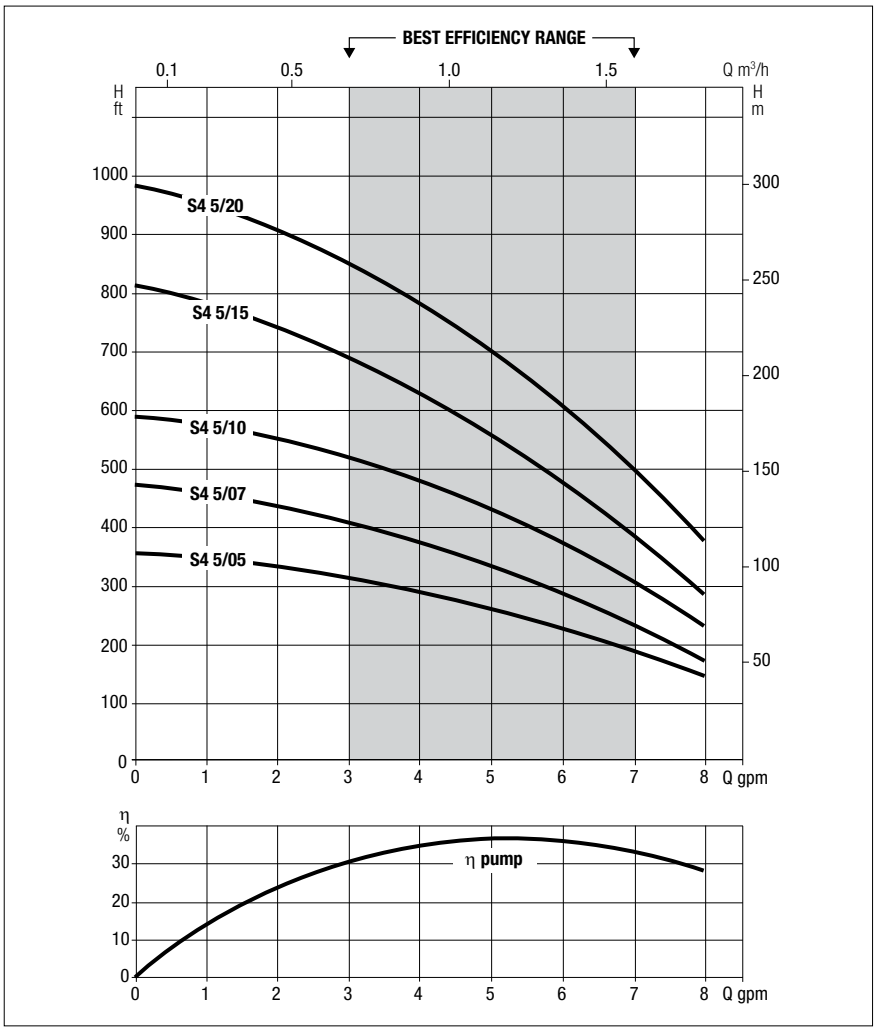

Curve tolerance according to ISO 9906

DIMENSIONS AND WEIGHTS

MODEL	MOTOR TYPE	H LENGTH inch	H LENGTH mm	GROSS WEIGHT lbs	GROSS WEIGHT kg	DISCHARGE SIZE npt
S4 5/05	NO MOTOR	15.8	401	7.3	3.3	1" 1/4
	4TW 2W	29.3	744	28.5	12.9	
	4GG 3W	26.3	668	26.7	12.1	
	4TW 2W	28.9	734	28.3	12.8	
	4GG 3W	26.3	668	26.7	12.1	
S4 5/07	NO MOTOR	18.5	470	8.6	3.9	1" 1/4
	4TW 2W	32.3	820	31.9	14.5	
	4GG 3W	29.8	757	30.0	13.6	
S4 5/10	NO MOTOR	20.7	526	9.7	4.4	1" 1/4
	4TW 2W	37.5	953	38.4	17.4	
	4GG 3W	34.3	871	37.6	17.1	
S4 5/15	NO MOTOR	25.5	648	11.7	5.3	1" 1/4
	4TW 2W	44.1	1.120	44.3	20.1	
	4GG 3W	40.9	1.039	44.1	20	
S4 5/20	NO MOTOR	25.9	658	16.3	7.4	1" 1/4

DIMENSIONS

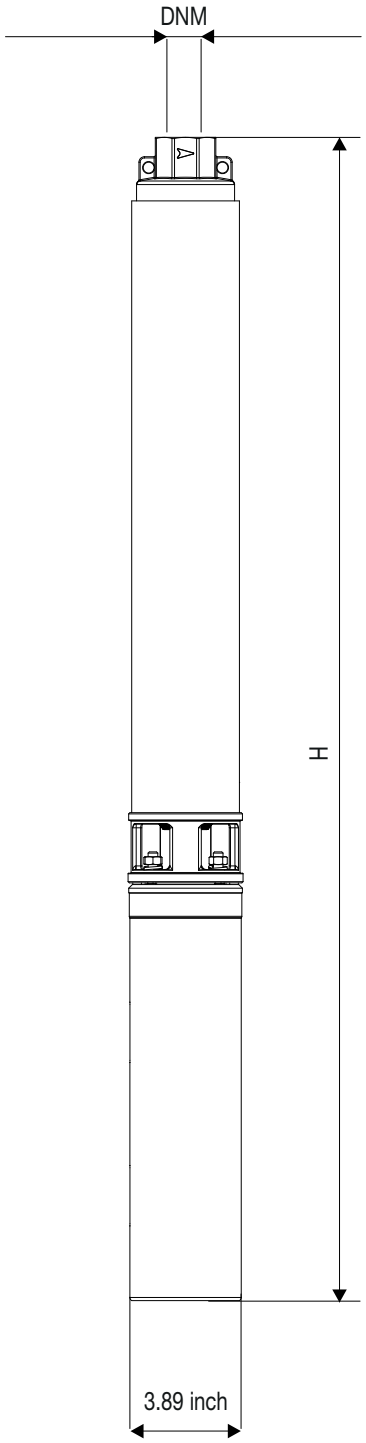

DAB PUMPS reserves the right to make modifications without notice

S4 7

4" SUBMERSIBLE ELECTRIC PUMPS

TECHNICAL DATA

MODEL	2 WIRE	3 WIRE	PUMP END	VOLTAGE	ASSEMBLED VERSION	MOTOR TYPE	P2 HP	STAGES
	CODE	CODE	CODE					
S4 7/05			60198615	-	-	NO MOTOR	0.5	8
	60198633	60198656		115	YES*	4TW 2W		
						4GG 3W		
	60198640	60198663		230	YES*	4TW 2W		
						4GG 3W		
S4 7/07			60198616	-	-	NO MOTOR	0.75	11
	60198641	60198664		230	YES*	4TW 2W		
						4GG 3W		
S4 7/10			60198617	-	-	NO MOTOR	1	14
	60198642	60198665		230	YES*	4TW 2W		
						4GG 3W		
S4 7/15			60198618	-	-	NO MOTOR	1.5	19
	60198643	60198666		230	YES*	4TW 2W		
						4GG 3W		
S4 7/20			60196215	-	-	NO MOTOR	2	24
S4 7/30			60196216	-	-	NO MOTOR	3	33

* assembled version available with canned motor 4GG and 4TW

S4 7

4" SUBMERSIBLE ELECTRIC PUMPS

RANGE PERFORMANCE

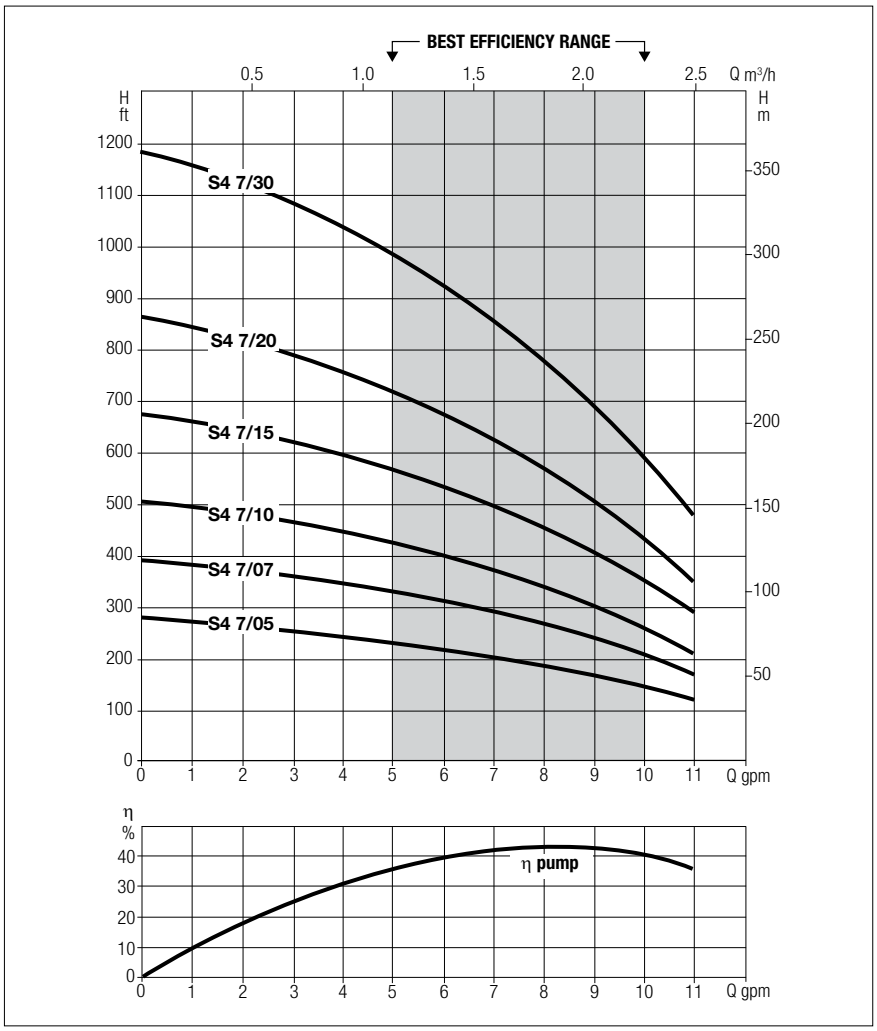

Curve tolerance according to ISO 9906

DIMENSIONS AND WEIGHTS

MODEL	MOTOR TYPE	H LENGTH inch	H LENGTH mm	GROSS WEIGHT lbs	GROSS WEIGHT kg	DISCHARGE SIZE npt
S4 7/05	NO MOTOR	15.6	396	6.0	2.7	1" 1/4
	4TW 2W	29.0	737	27.2	12.3	
	4GG 3W	26.1	663	25.4	11.5	
	4TW 2W	28.6	726	27.0	12.2	
	4GG 3W	26.1	663	25.4	11.5	
S4 7/07	NO MOTOR	18.4	467	7.3	3.3	1" 1/4
	4TW 2W	32.2	818	30.5	13.8	
	4GG 3W	29.7	754	28.7	13	
S4 7/10	NO MOTOR	21.2	538	8.2	3.7	1" 1/4
	4TW 2W	37.9	963	36.8	16.7	
	4GG 3W	34.8	884	36.0	16.3	
S4 7/15	NO MOTOR	25.8	655	9.9	4.5	1" 1/4
	4TW 2W	44.4	1.128	42.5	19.3	
	4GG 3W	41.2	1.046	42.3	19.2	
S4 7/20	NO MOTOR	30.4	772	11.2	5.1	1" 1/4
S4 7/30	NO MOTOR	33.8	859	17.2	7.8	1" 1/4

DIMENSIONS

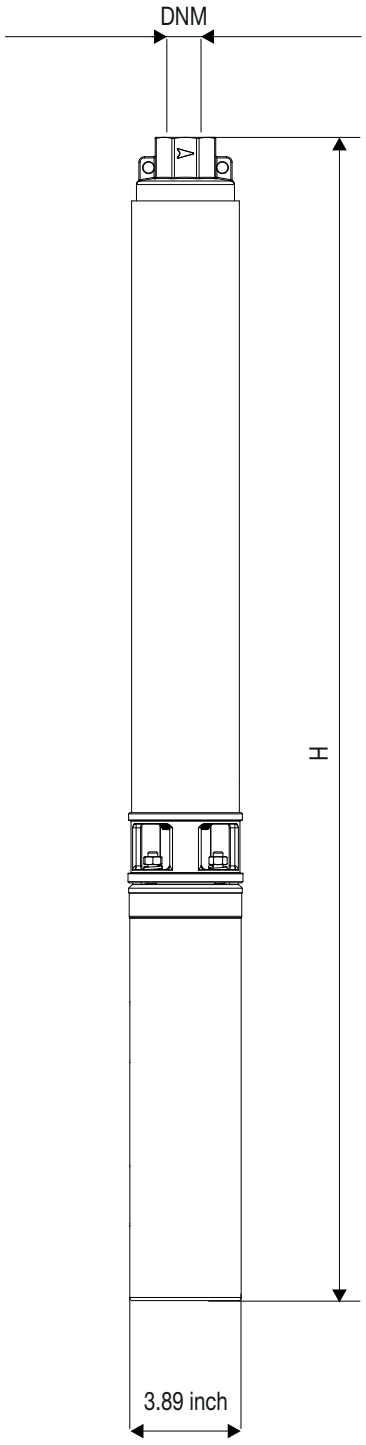

DAB PUMPS reserves the right to make modifications without notice

S4 10

4" SUBMERSIBLE ELECTRIC PUMPS

TECHNICAL DATA

MODEL	2 WIRE	3 WIRE	PUMP END	VOLTAGE	ASSEMBLED VERSION	MOTOR TYPE	P2 HP	STAGES
	CODE	CODE	CODE					
S4 10/05			60198619	-	-	NO MOTOR	0.5	7
	60198634	60198657		115	YES*	4TW 2W		
						4GG 3W		
	60198644	60198667		230	YES*	4TW 2W		
						4GG 3W		
S4 10/07			60198620	-		NO MOTOR	0.75	10
	60198645	60198668		230	YES*	4TW 2W		
						4GG 3W		
S4 10/10			60198621	-	-	NO MOTOR	1	12
	60198646	60198669		230	YES*	4TW 2W		
						4GG 3W		
S4 10/15			60198622	-	-	NO MOTOR	1.5	17
	60198647	60198670		230	YES*	4TW 2W		
						4GG 3W		
S4 10/20			60196222	-	-	NO MOTOR	2	22
S4 10/30			60196223	-	-	NO MOTOR	3	29
S4 10/50			60196224	-	-	NO MOTOR	5	46

* assembled version available with canned motor 4GG and 4TW

S4 10

4" SUBMERSIBLE ELECTRIC PUMPS

RANGE PERFORMANCE

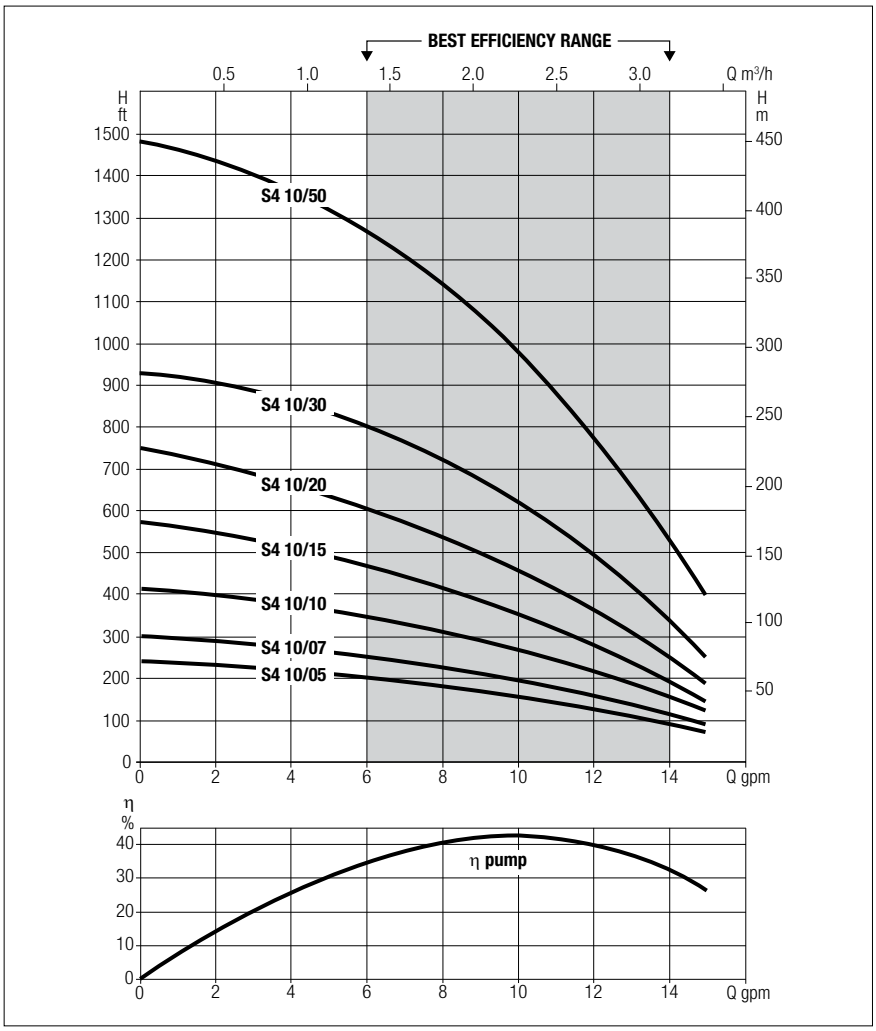

Curve tolerance according to ISO 9906

DIMENSIONS AND WEIGHTS

MODEL	MOTOR TYPE	H LENGTH inch	H LENGTH mm	GROSS WEIGHT lbs	GROSS WEIGHT kg	DISCHARGE SIZE npt
S4 10/05	NO MOTOR	14.7	373	6.2	2.8	1" 1/4
	4TW 2W	28.1	714	27.4	12.4	
	4GG 3W	25.2	640	25.6	11.6	
	4TW 2W	27.7	704	27.2	12.3	
	4GG 3W	25.2	640	25.6	11.6	
S4 10/07	NO MOTOR	17.5	445	7.1	3.2	1" 1/4
	4TW 2W	31.3	795	30.3	13.7	
	4GG 3W	28.7	729	28.4	12.9	
S4 10/10	NO MOTOR	19.3	490	7.7	3.5	1" 1/4
	4TW 2W	36.1	917	36.4	16.5	
	4GG 3W	32.9	836	35.6	16.1	
S4 10/15	NO MOTOR	24.0	610	9.3	4.2	1" 1/4
	4TW 2W	42.5	1.080	41.9	19	
	4GG 3W	39.4	1.001	41.7	18.9	
S4 10/20	NO MOTOR	28.6	726	11.0	5	1" 1/4
S4 10/30	NO MOTOR	35.1	892	13.2	6	1" 1/4
S4 10/50	NO MOTOR	45.7	1.161	22.9	10.4	1" 1/4

DIMENSIONS

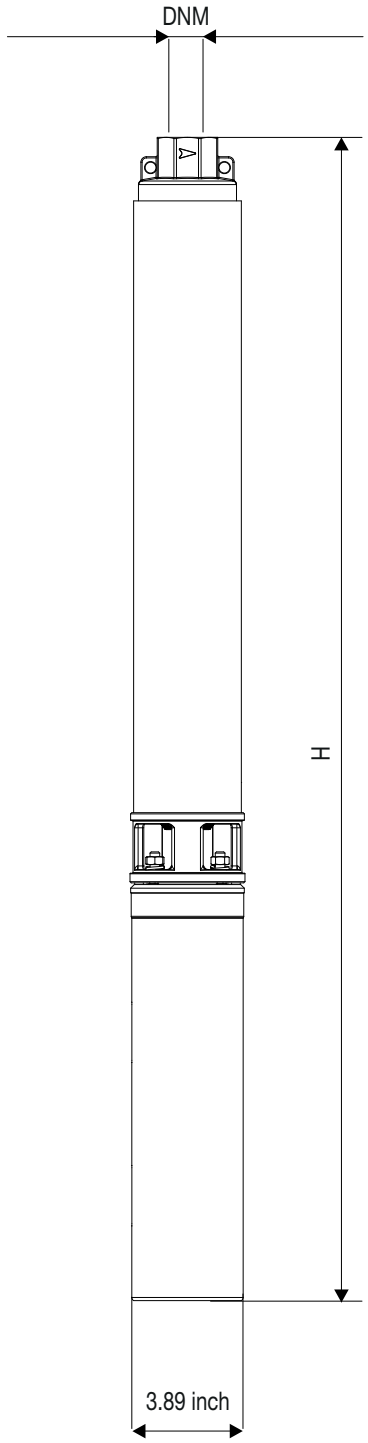

DAB PUMPS reserves the right to make modifications without notice

S4 15

4" SUBMERSIBLE ELECTRIC PUMPS

TECHNICAL DATA

MODEL	2 WIRE	3 WIRE	PUMP END	VOLTAGE	ASSEMBLED VERSION	MOTOR TYPE	P2 HP	STAGES
	CODE	CODE	CODE					
S4 15/05			60198623	-	-	NO MOTOR	0.5	5
	60198635	60198658		115	YES*	4TW 2W		
						4GG 3W		
	60198648	60198671		230	YES*	4TW 2W		
						4GG 3W		
S4 15/07			60198624	-	-	NO MOTOR	0.75	7
	60198649	60198672		230	YES*	4TW 2W		
						4GG 3W		
S4 15/10			60198625	-	-	NO MOTOR	1	9
	60198650	60198673		230	YES*	4TW 2W		
						4GG 3W		
S4 15/15			60198626	-	-	NO MOTOR	1.5	12
	60198651	60198674		230	YES*	4TW 2W		
						4GG 3W		
S4 15/20			60196229	-	-	NO MOTOR	2	16
S4 15/30			60196230	-	-	NO MOTOR	3	23
S4 15/50			60196231	-	-	NO MOTOR	5	36

* assembled version available with canned motor 4GG and 4TW

S4 15

4" SUBMERSIBLE ELECTRIC PUMPS

RANGE PERFORMANCE

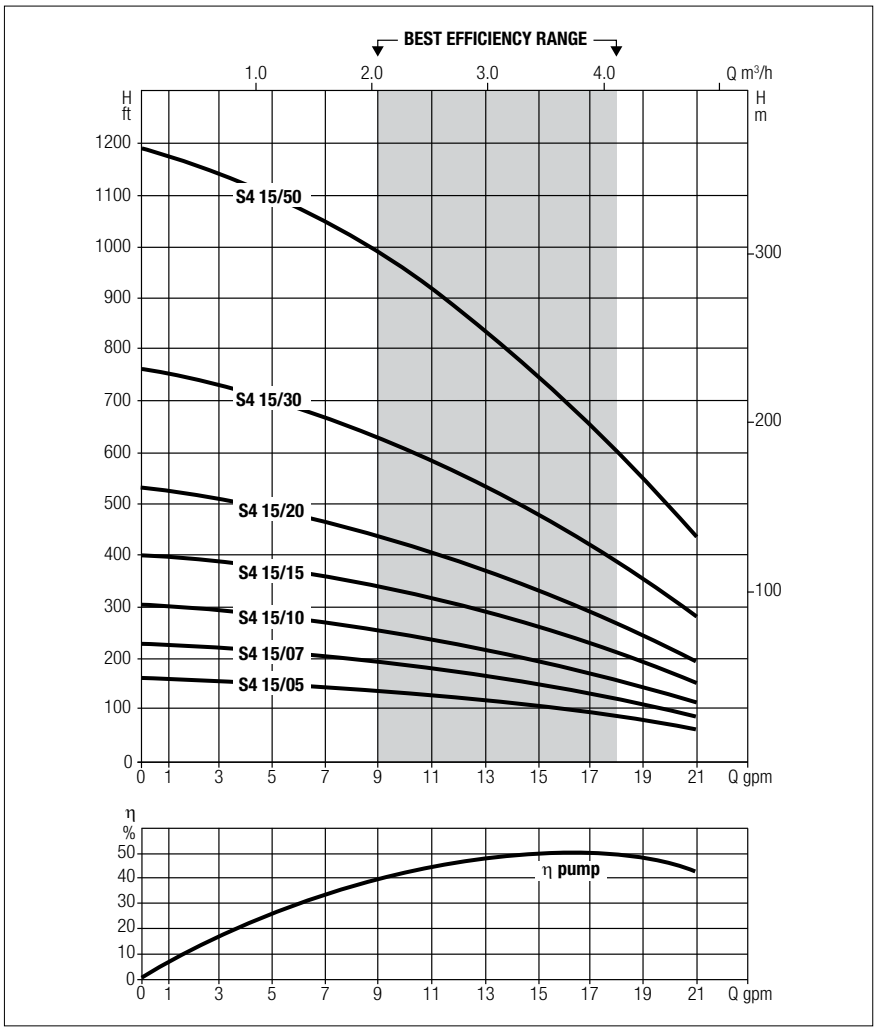

Curve tolerance according to ISO 9906

DIMENSIONS

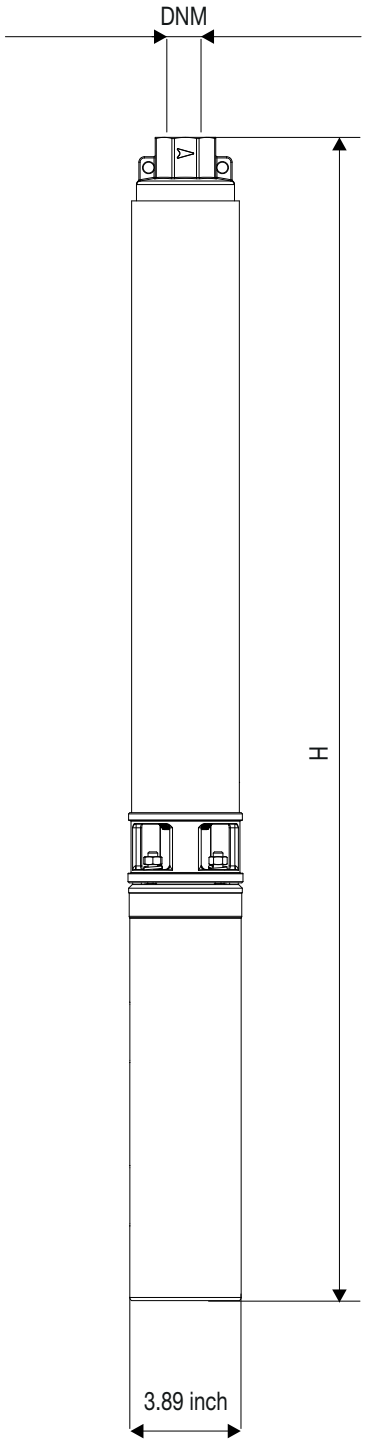

DIMENSIONS AND WEIGHTS

MODEL	MOTOR TYPE	H LENGTH inch	H LENGTH mm	GROSS WEIGHT lbs	GROSS WEIGHT kg	DISCHARGE SIZE npt
S4 15/05	NO MOTOR	13.7	348	6.0	2.7	1" 1/4
	4TW 2W	27.1	688	27.2	12.3	
	4GG 3W	24.2	615	25.4	11.5	
	4TW 2W	26.7	678	27.0	12.2	
	4GG 3W	24.2	615	25.4	11.5	
S4 15/07	NO MOTOR	15.9	404	6.6	3	1" 1/4
	4TW 2W	29.7	754	29.9	13.6	
	4GG 3W	27.1	688	28.0	12.7	
S4 15/10	NO MOTOR	18.1	460	7.5	3.4	1" 1/4
	4TW 2W	34.8	884	36.2	16.4	
	4GG 3W	31.7	805	35.4	16.1	
S4 15/15	NO MOTOR	21.4	544	8.6	3.9	1" 1/4
	4TW 2W	39.9	1.013	41.2	18.7	
	4GG 3W	36.8	935	41.0	18.6	
S4 15/20	NO MOTOR	25.7	653	10.4	4	1" 1/4
S4 15/30	NO MOTOR	33.4	848	14.1	6.4	1" 1/4
S4 15/50	NO MOTOR	42.8	1.087	20.5	9.3	1" 1/4

DAB PUMPS reserves the right to make modifications without notice

S4 20

4" SUBMERSIBLE ELECTRIC PUMPS

TECHNICAL DATA

MODEL	2 WIRE	3 WIRE	PUMP END	VOLTAGE	ASSEMBLED VERSION	MOTOR TYPE	P2 HP	STAGES
	CODE	CODE	CODE					
S4 20/07			60198627	-	-	NO MOTOR	0.75	6
	60198652	60198675		230	YES*	4TW 2W		
						4GG 3W		
S4 20/10			60198628	-	-	NO MOTOR	1	7
	60198653	60198676		230	YES*	4TW 2W		
						4GG 3W		
S4 20/15			60198629	-	-	NO MOTOR	1.5	10
	60198654	60198677		230	YES*	4TW 2W		
						4GG 3W		
S4 20/20			60196235	-	-	NO MOTOR	2	13
S4 20/30			60196236	-	-	NO MOTOR	3	18
S4 20/50			60196237	-	-	NO MOTOR	5	28

* assembled version available with canned motor 4GG and 4TW

S4 20

4" SUBMERSIBLE ELECTRIC PUMPS

RANGE PERFORMANCE

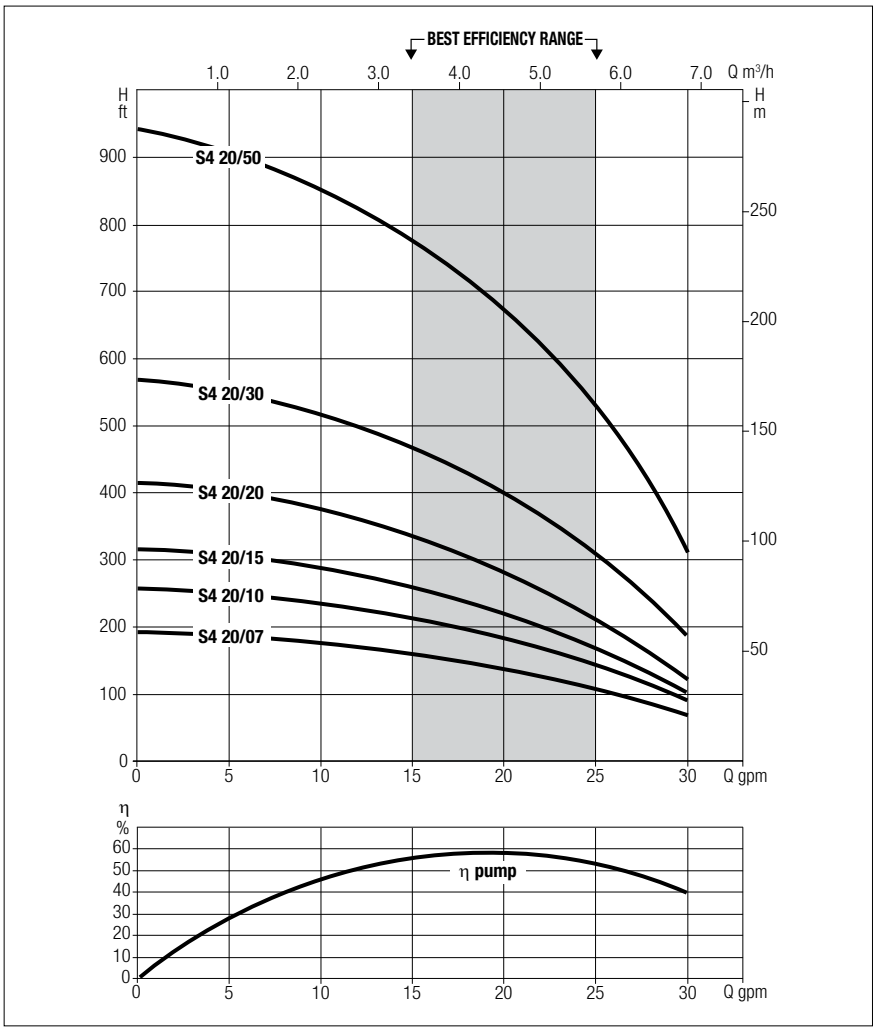

Curve tolerance according to ISO 9906

DIMENSIONS AND WEIGHTS

MODEL	MOTOR TYPE	H LENGTH inch	H LENGTH mm	GROSS WEIGHT lbs	GROSS WEIGHT kg	DISCHARGE SIZE npt
S4 20/07	NO MOTOR	14.2	361	6.2	2.8	1" 1/4
	4TW 2W	28.1	714	29.4	13.3	
	4GG 3W	25.5	648	27.6	12.5	
S4 20/10	NO MOTOR	15.3	389	6.6	3	1" 1/4
	4TW 2W	32.0	813	35.3	16	
	4GG 3W	28.9	734	34.5	15.6	
S4 20/15	NO MOTOR	18.2	462	9.9	4.5	1" 1/4
	4TW 2W	36.8	935	42.5	19.3	
	4GG 3W	33.6	853	42.3	19.2	
S4 20/20	NO MOTOR	21.3	541	9.3	4.2	1" 1/4
S4 20/30	NO MOTOR	26.3	668	11.9	5.4	1" 1/4
S4 20/50	NO MOTOR	31.1	790	18.3	8.3	1" 1/4

DIMENSIONS

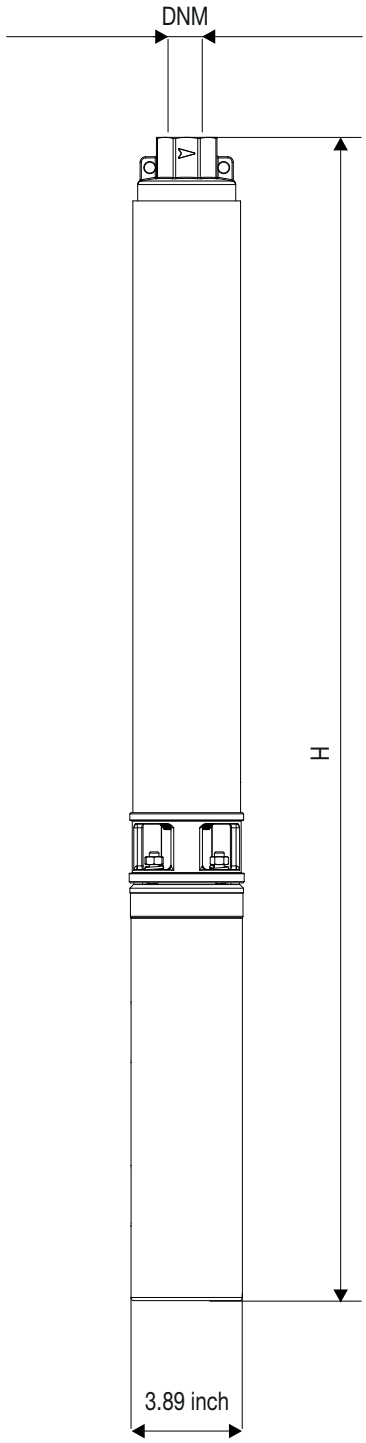

DAB PUMPS reserves the right to make modifications without notice

S4 25

4" SUBMERSIBLE ELECTRIC PUMPS

TECHNICAL DATA

MODEL	2 WIRE	3 WIRE	PUMP END	VOLTAGE	ASSEMBLED VERSION	MOTOR TYPE	P2 HP	STAGES
	CODE	CODE	CODE					
S4 25/10	-	-	60198630	-	-	NO MOTOR	1	7
	60199005	60199007		230	YES*	4TW 2W		
						4GG 3W		
S4 25/15	-	-	60198631	-	-	NO MOTOR	1.5	10
	60199006	60199008		230	YES*	4TW 2W		
						4GG 3W		
S4 25/20	-	-	60196240	-	-	NO MOTOR	2	13
S4 25/30	-	-	60196241	-	-	NO MOTOR	3	17
S4 25/50	-	-	60196242	-	-	NO MOTOR	5	26

* assembled version available with canned motor 4GG and 4TW

S4 25

4" SUBMERSIBLE ELECTRIC PUMPS

RANGE PERFORMANCE

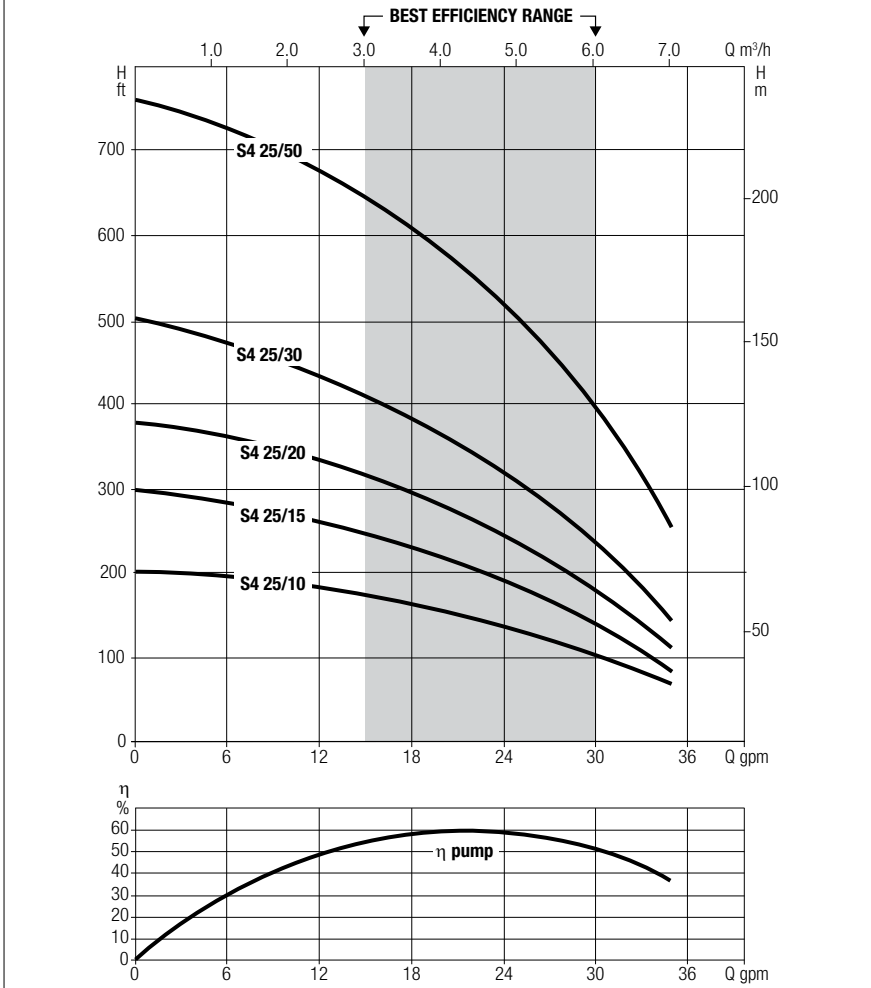

Curve tolerance according to ISO 9906

DIMENSIONS AND WEIGHTS

MODEL	MOTOR TYPE	H LENGTH inch	H LENGTH mm	GROSS WEIGHT lbs	GROSS WEIGHT kg	DISCHARGE SIZE npt
S4 25/10	NO MOTOR	17.8	452	7.5	3.4	1" 1/4
	4TW 2W	34.6	879	36.2	16.4	
	4GG 3W	31.4	798	35.4	16.1	
S4 25/15	NO MOTOR	21.9	556	9.0	4.1	1" 1/4
	4TW 2W	40.5	1.029	41.7	18.9	
	4GG 3W	37.3	947	41.4	18.8	
S4 25/20	NO MOTOR	26.0	660	10.4	4.7	1" 1/4
S4 25/30	NO MOTOR	31.4	798	12.1	5.5	1" 1/4
S4 25/50	NO MOTOR	42.2	1.072	19.4	8.8	1" 1/4

DIMENSIONS

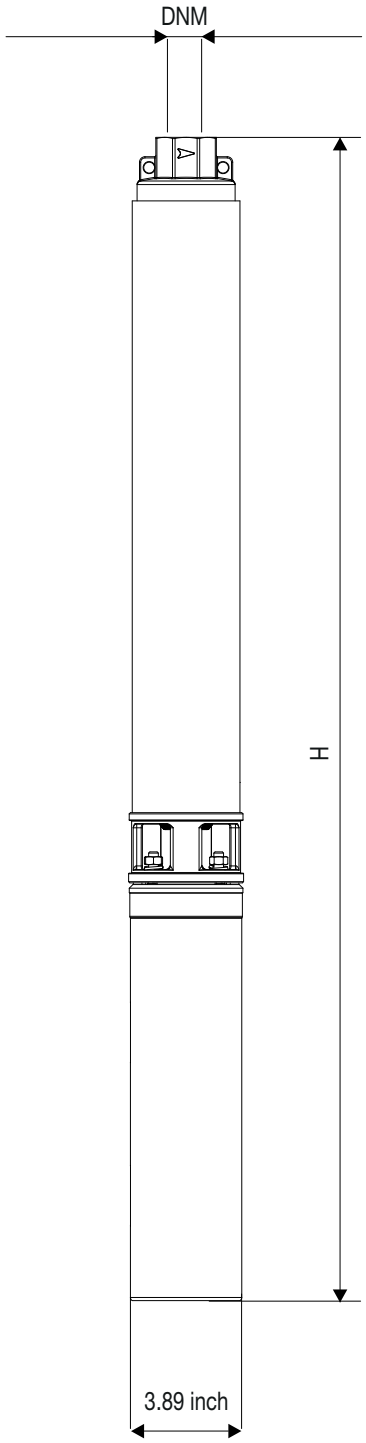

DAB PUMPS reserves the right to make modifications without notice

S4 35

4" SUBMERSIBLE ELECTRIC PUMPS

TECHNICAL DATA

MODEL	PUMP END CODE	P2 HP	STAGES	MOTOR TYPE
S4 35/10	60196243	1	6	NO MOTOR
S4 35/15	60196244	1.5	8	NO MOTOR
S4 35/20	60196245	2	10	NO MOTOR
S4 35/30	60196246	3	14	NO MOTOR
S4 35/50	60196247	5	24	NO MOTOR
S4 35/75	60196248	7.5	35	NO MOTOR
S4 35/100	60196249	10	49	NO MOTOR

S4 35

4" SUBMERSIBLE ELECTRIC PUMPS

RANGE PERFORMANCE

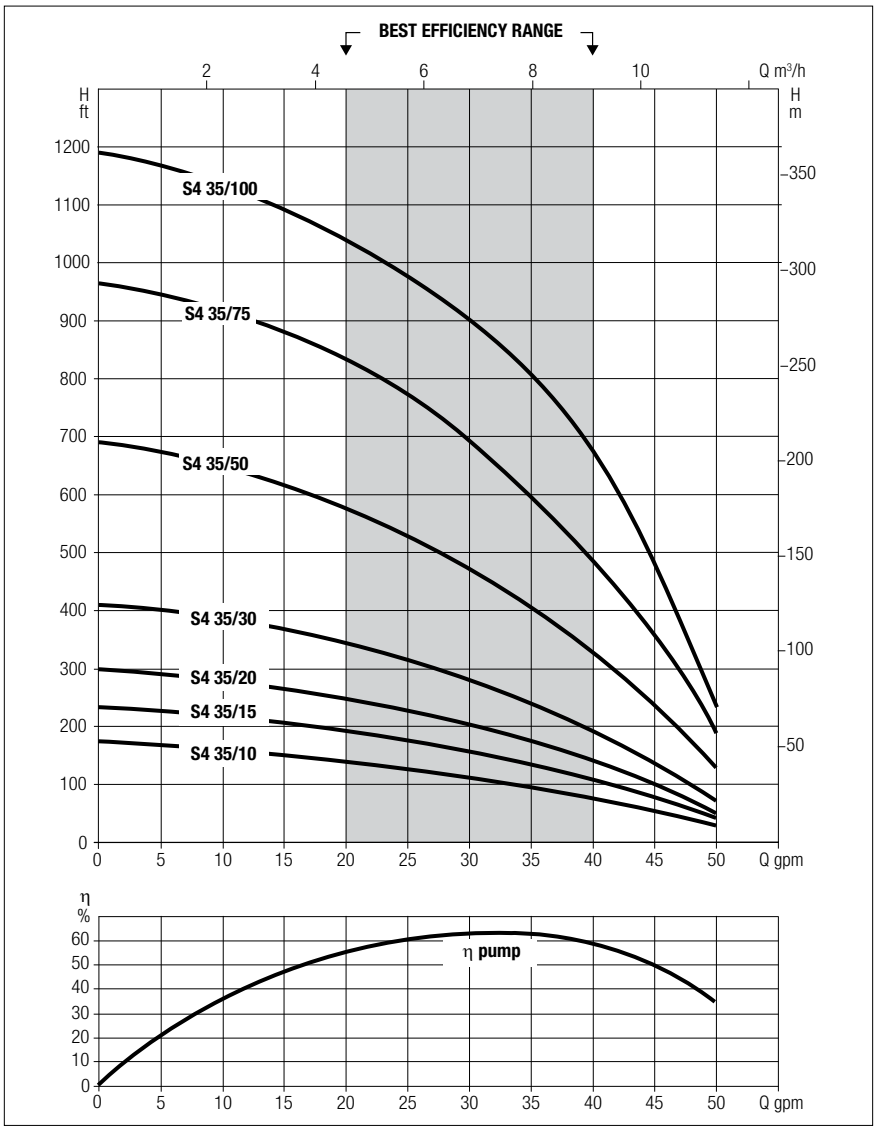

Curve tolerance according to ISO 9906

DIMENSIONS AND WEIGHTS

MODEL	MOTOR TYPE	H LENGTH inch	H LENGTH mm	GROSS WEIGHT lbs	GROSS WEIGHT kg	DISCHARGE SIZE npt
S4 35/10	NO MOTOR	16.6	422	7.1	3.2	2"
S4 35/15	NO MOTOR	19.2	488	7.9	3.6	2"
S4 35/20	NO MOTOR	21.8	554	9.0	4.1	2"
S4 35/30	NO MOTOR	26.9	683	10.8	4.9	2"
S4 35/50	NO MOTOR	38.5	978	18.3	8.3	2"
S4 35/75	NO MOTOR	51.9	1.318	25.1	11.4	2"
S4 35/100	NO MOTOR	68.9	1.750	34.4	15.6	2"

DIMENSIONS

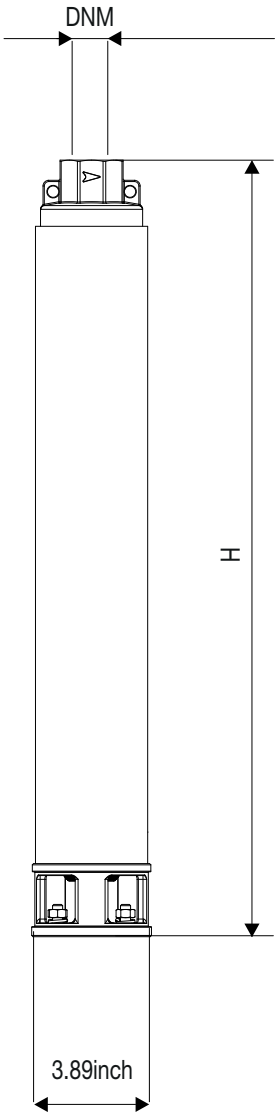

DAB PUMPS reserves the right to make modifications without notice

S4 45

4" SUBMERSIBLE ELECTRIC PUMPS

TECHNICAL DATA

MODEL	PUMP END CODE	P2 HP	STAGES	MOTOR TYPE
S4 45/15	60196250	1.5	5	NO MOTOR
S4 45/20	60196251	2	7	NO MOTOR
S4 45/30	60196252	3	9	NO MOTOR
S4 45/50	60196253	5	14	NO MOTOR
S4 45/75	60196254	7.5	22	NO MOTOR
S4 45/100	60196255	10	30	NO MOTOR

S4 45

4" SUBMERSIBLE ELECTRIC PUMPS

RANGE PERFORMANCE

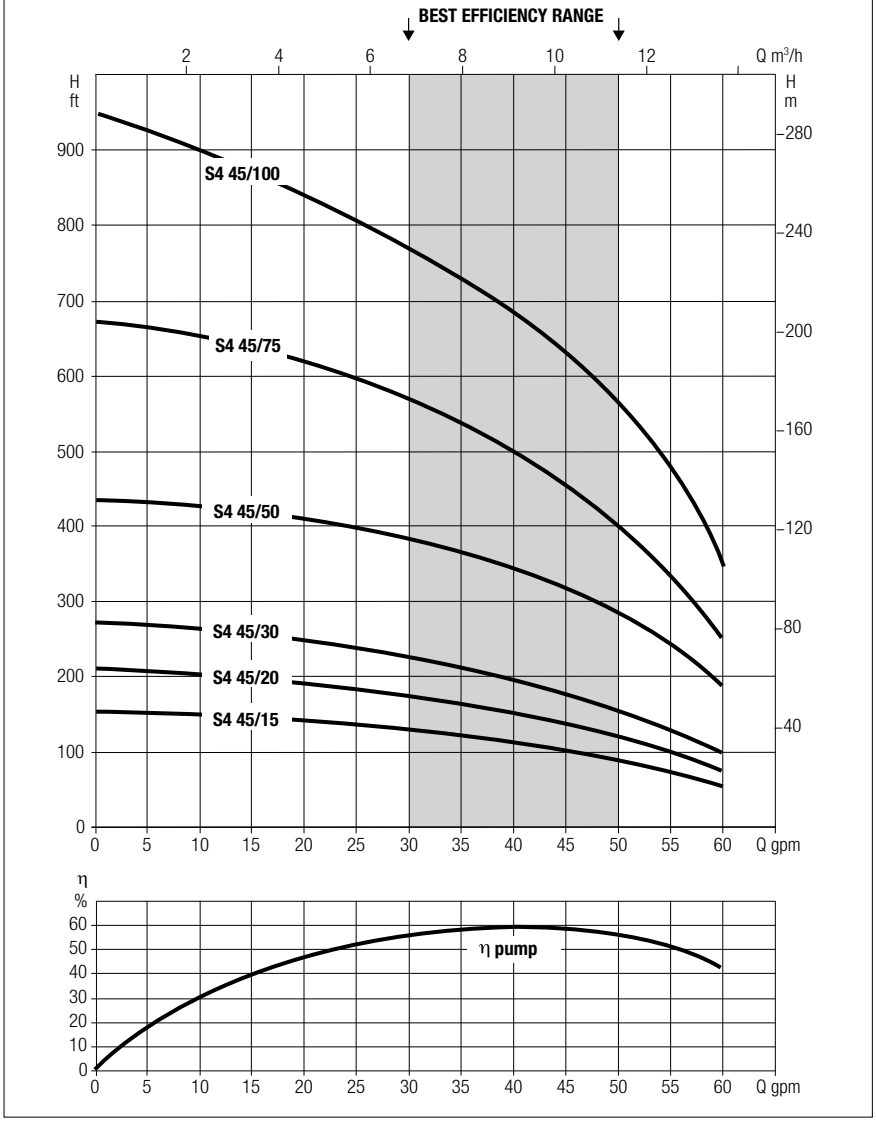

Curve tolerance according to ISO 9906

DIMENSIONS AND WEIGHTS

MODEL	MOTOR TYPE	H LENGHT inch	H LENGHT mm	GROSS WEIGHT lbs	GROSS WEIGHT kg	DISCHARGE SIZE npt
S4 45/15	NO MOTOR	15.3	389	6.6	3	2"
S4 45/20	NO MOTOR	17.9	455	7.5	3.4	2"
S4 45/30	NO MOTOR	20.5	521	8.4	3.8	2"
S4 45/50	NO MOTOR	24.8	630	12.1	5.5	2"
S4 45/75	NO MOTOR	36.0	914	18.1	8.2	2"
S4 45/100	NO MOTOR	45.8	1.163	22.9	10.4	2"

DIMENSIONS

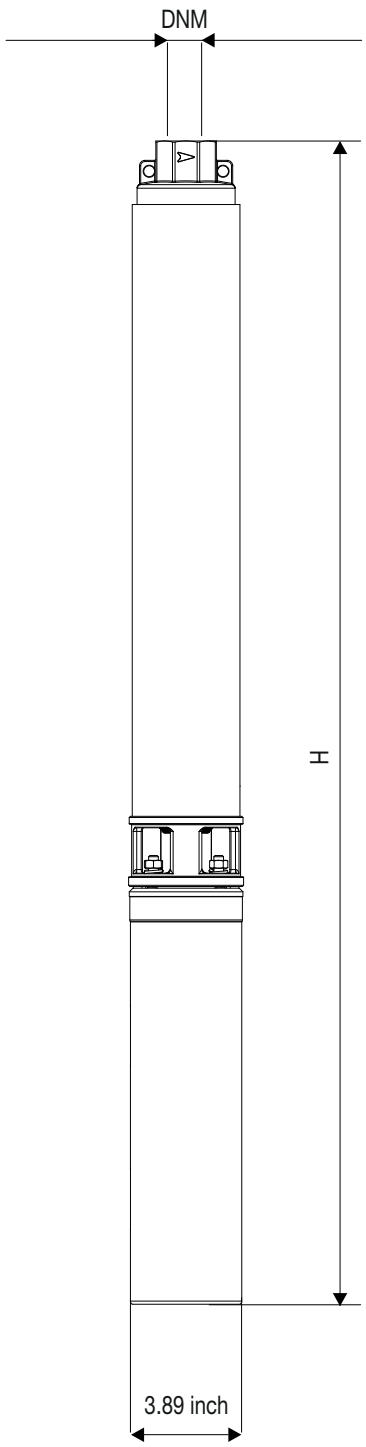

DAB PUMPS reserves the right to make modifications without notice

S4 60

4" SUBMERSIBLE ELECTRIC PUMPS

TECHNICAL DATA

MODEL	PUMP END CODE	P2 HP	STAGES	MOTOR TYPE
S4 60/20	60196256	2	6	NO MOTOR
S4 60/30	60196257	3	8	NO MOTOR
S4 60/50	60196258	5	13	NO MOTOR
S4 60/75	60196259	7.5	17	NO MOTOR
S4 60/100	60196260	10	23	NO MOTOR

NOTE: performances shown does not include friction loss in the drop pipe. All performance data is based on rated motor nameplate voltage. Performance shown is based on a pump without check valve.

S4 60

4" SUBMERSIBLE ELECTRIC PUMPS

RANGE PERFORMANCE

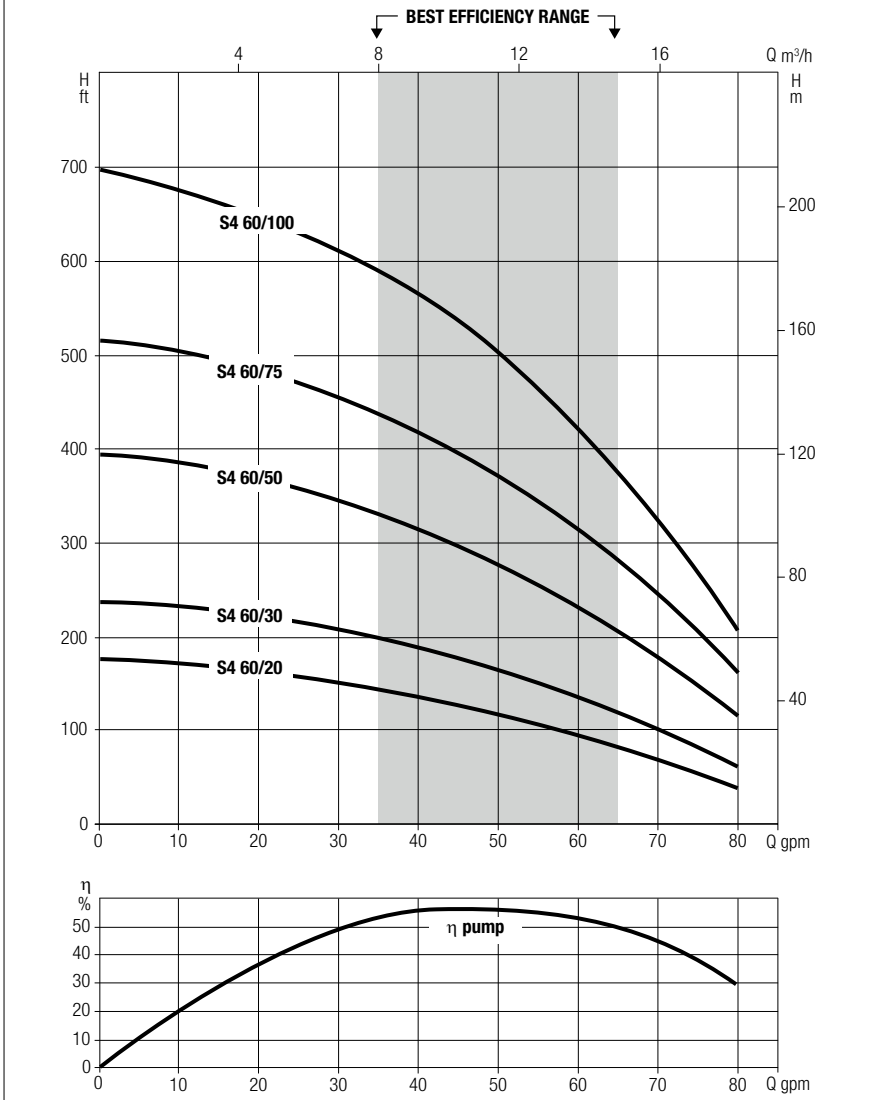

Curve tolerance according to ISO 9906

DIMENSIONS AND WEIGHTS

MODEL	MOTOR TYPE	H LENGHT inch	H LENGHT mm	GROSS WEIGHT lbs	GROSS WEIGHT kg	DISCHARGE SIZE npt
S4 60/20	NO MOTOR	21.0	533	9.7	4.4	2"
S4 60/30	NO MOTOR	25.1	638	11.5	5.2	2"
S4 60/50	NO MOTOR	34.3	871	16.1	7.3	2"
S4 60/75	NO MOTOR	44.0	1.118	21.4	9.7	2"
S4 60/100	NO MOTOR	56.2	1.427	28.7	13	2"

DIMENSIONS

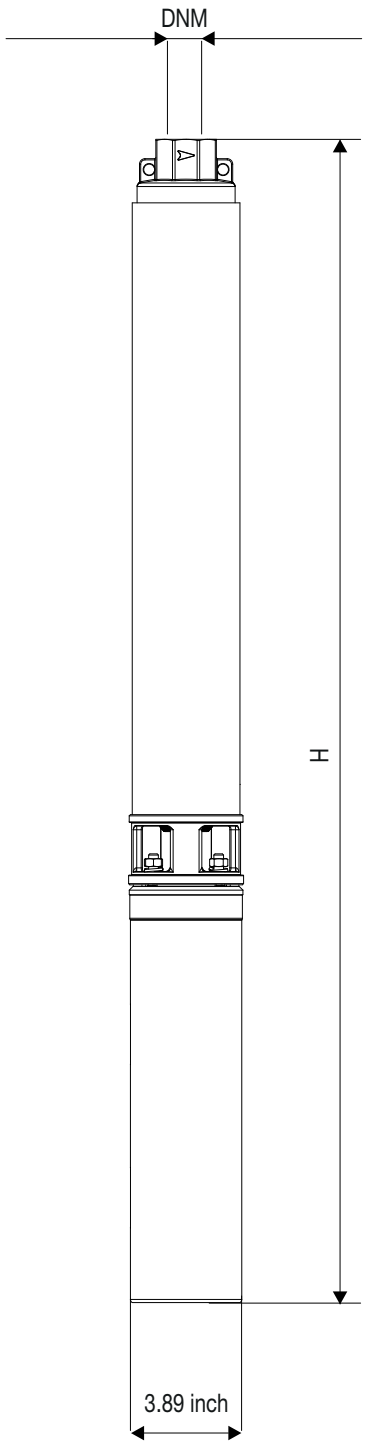

DAB PUMPS reserves the right to make modifications without notice

S4 90

4" SUBMERSIBLE ELECTRIC PUMPS

TECHNICAL DATA

MODEL	PUMP END CODE	P2 HP	STAGES	MOTOR TYPE
S4 90/20	60196261	2	5	NO MOTOR
S4 90/30	60196262	3	6	NO MOTOR
S4 90/50	60196263	5	10	NO MOTOR
S4 90/75	60196264	7.5	14	NO MOTOR
S4 90/100	60196265	10	19	NO MOTOR

NOTE: performances shown does not include friction loss in the drop pipe. All performance data is based on rated motor nameplate voltage. Performance shown is based on a pump without check valve.

S4 90

4" SUBMERSIBLE ELECTRIC PUMPS

RANGE PERFORMANCE

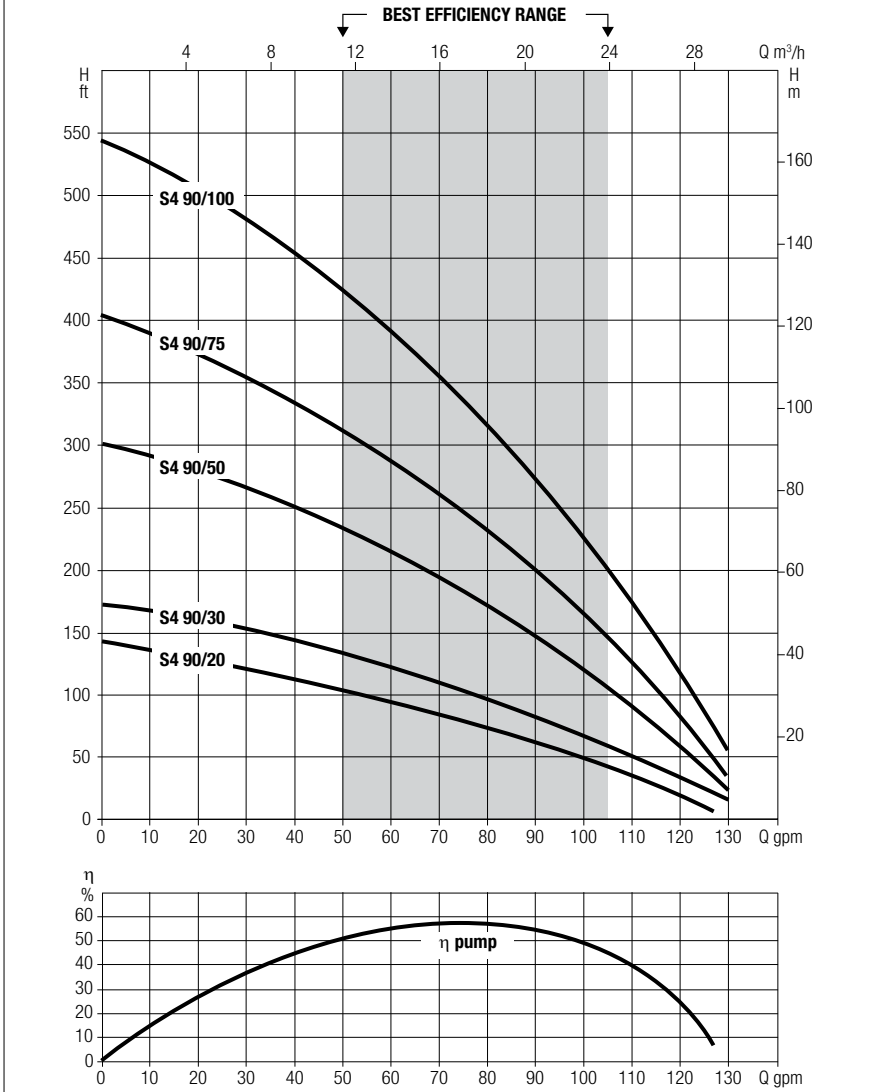

Curve tolerance according to ISO 9906

DIMENSIONS AND WEIGHTS

MODEL	MOTOR TYPE	H LENGHT inch	H LENGHT mm	GROSS WEIGHT lbs	GROSS WEIGHT kg	DISCHARGE SIZE npt
S4 90/20	NO MOTOR	22.1	561	9.7	4.4	2"
S4 90/30	NO MOTOR	24.8	630	10.8	4.9	2"
S4 90/50	NO MOTOR	34.5	876	17.2	7.8	2"
S4 90/75	NO MOTOR	46.7	1.186	22.7	10.3	2"
S4 90/100	NO MOTOR	60.1	1.527	28.9	13.1	2"

DIMENSIONS

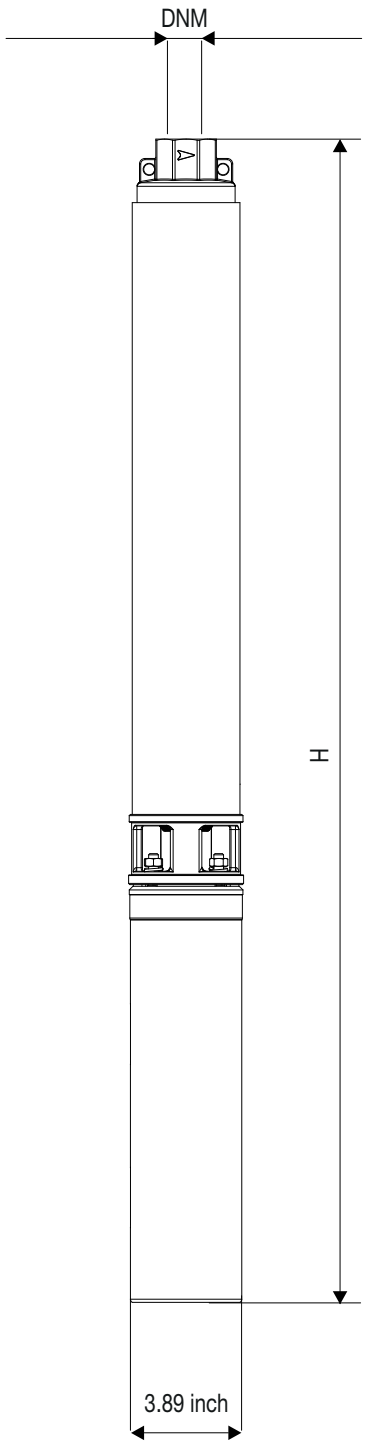

DAB PUMPS reserves the right to make modifications without notice

S4

4" SUBMERSIBLE ELECTRIC PUMPS

HYDRAULIC EFFICIENCY

US DOE,S PUMPS ENERGY CONSERVATION STANDARDS

GENERAL INFORMATION

The “S4” pumps are compliant with US DOE,s Pumps energy conservation standards:

- 431.462 Clean water pump
- 431.464 Test procedure for the measurement of energy efficiency, energy consumption, and other performance factors of pumps.
- 431.465 Pumps energy conservation standards and their compliance dates.
- 431.466 Pumps labeling requirements.

The testing and labelling is done by DAB as per the following test procedure, no certification body involvement required for USA.

Appendix A to Subpart Y of Part 431—Uniform Test Method for the Measurement of Energy Consumption of Pumps.

For more info: www.ecfr.gov

BEP US gpm	P2 kW	P2 HP	DAB Model (Pump End DAB)	STAGES	PEI pump end	PEI Hydraulic + 2W motor 230 V	PEI Hydraulic + 3W motor 230 V
25	0.75	1	**S 25/10**	7	**0.98**	**1**	**0.98**
	1.1	1.5	**S 25/15**	10	**0.88**	**0.97**	**0.92**
	1.5	2	**S 25/20**	13	**0.87**		
	2.2	3	**S 25/30**	17	**0.93**		
	3.7	5	**S 25/50**	26	**0.9**		
35	0.75	1	**S 35/10**	6	**0.94**		
	1.1	1.5	**S 35/15**	8	**0.9**		
	1.5	2	**S 35/20**	10	**0.89**		
	2.2	3	**S 35/30**	14	**0.9**		
	3.7	5	**S 35/50**	24	**0.88**		
	5.5	7.5	**S 35/75**	35	**0.92**		
	7.5	10	**S 35/100**	49	**0.92**		
45	1.1	1.5	**S 45/15**	5	**0.98**		
	1.5	2	**S 45/20**	7	**0.96**		
	2.2	3	**S 45/30**	9	**0.97**		
	3.7	5	**S 45/50**	14	**0.92**		
	5.5	7.5	**S 45/75**	22	**0.94**		
	7.5	10	**S 45/100**	30	**0.94**		
60	1.5	2	**S 60/20**	6	**1**		
	2.2	3	**S 60/30**	8	**1**		
	3.7	5	**S 60/50**	13	**0.98**		
	5.5	7.5	**S 60/75**	17	**1**		
	7.5	10	**S 60/100**	23	**1**		
90	1.5	2	**S 90/20**	5	**1**		
	2.2	3	**S 90/30**	6	**1**		
	3.7	5	**S 90/50**	10	**1**		
	5.5	7.5	**S 90/75**	14	**1**		
	7.5	10	**S 90/100**	19	**0.96**		

4TW

SUBMERSIBLE MOTOR 4"



4" Asynchronous two-poles submersible motor, made in AISI 304 stainless steel for parts in contact with water. Cooling and lubrication of the thrust bearing assembly and carbon bushes is provided by a mixture of water and glycol. Squirrel-cage rotor mounted on Kingsbury self-centring thrust bearing. Stator housed in an airtight stainless steel casing (canned-type) with both flangs and shell in AISI 304L stainless steel.
On request is available the **4TWX** version made entirely in stainless steel AISI 316.
Removable cable connector to allow fast and easy maintenance. The cable is certified ACS, WRAS and KTW. Motor suitable for use with variable frequency drive (30 Hz – 50/60 Hz). The capacitor is placed in the Noryl cartridge directly connected to the motor, so the motor doesn't require an external control box. Thermal protection included in the motor from 0.5 HP to 1.5 HP in the 50 Hz version, from 0.5 HP to 1 HP in the 230 V - 60 Hz version.

Flange NEMA 4"
Insulation class F
Protection class IP68
Cooling flow speed 1.0 ft/sec @ 95 °F
min. 0.3 m/s @ 35°C
Power supply tolerance + 6 % / -10 %
Max. starts 20/h
Max operating depth 984 ft (300 m)
Horizontal operation 0.5 HP - 1.5 HP
Motor maximum diameter 3.9" (99 mm)

TECHNICAL DATA - *SINGLE PHASE MOTORS*

MODEL	CODE	V [V]	P2		SF	In [A]	In (SF) [A]	Is/In	Cs/Cn	P1 [W]	N [min^{-1}]	Cos φ	η %	C [µF]	CABLE		
			[HP]	[kW]											Dia	lenght	
															[AWG]	ft	m
4TW - 0.5 HP	60174194	115	0.5	0.37	1.6	8.6	10	4.2	0.65	800	3450	0.88	46	80	3x14	5½	1.7
4TW - 0.5 HP	60174195	230			1.6	3.9	5	4.6	0.65	800	3450	0.88	46	20	3x14	5½	1.7
4TW - 0.75 HP	60174196	230	0.75	0.55	1.5	6.3	6.9	4.3	0.65	1200	3450	0.82	47	25	3x14	5½	1.7
4TW - 1 HP	60174197	230	1	0.75	1.4	7.7	8.8	4.8	0.68	1500	3450	0.84	50	35	3x14	5½	1.7
4TW - 1.5 HP	60174198	230	1.5	1.1	1.3	11.8	12.7	4.7	0.7	2120	3450	0.85	53	40	3x14	5½	1.7

V: Rated voltage
P2: Rated output
SF: Service factor
In: Rated current
In (SF): Service factor current
Is/In: Locked rotor current/Rated current
Cs/Cn: Locked rotor Torque/Rated Torque
P1: Power consumption
N: R.P.M
Cos φ: Power factor
η: Efficiency
C: Capacitor
Ø: Cable section
LC: Cable length

4TW

SUBMERSIBLE MOTOR 4"

DIMENSIONS AND WEIGHTS - *SINGLE PHASE MOTORS*

MODEL	L LENGTH inch	L LENGTH mm	WEIGHT lbs	WEIGHT kg	AXIAL THRUST lbf	AXIAL THRUST N	Q.TY x PALLET
4TW - 0.5 HP - 0.37KW	13.425	341	21.4	9,7	500	2000	N/A
4TW - 0.5 HP - 0.37KW	13.031	331	21.0	9,5	500	2000	N/A
4TW - 0.75 HP - 0.55KW	13.819	351	23.2	10,5	500	2000	N/A
4TW - 1 HP - 0.75KW	16.772	426	28.9	13,1	700	3000	N/A
4TW - 1.5 HP - 1.1KW	18.543	471	33.3	15,1	700	3000	N/A

POS.	inch	mm
A	0.61	$\emptyset\ 15.5^{+0.05}_{-0.03}$
B	0.591	$15^{+0.5}_{-0}$
C	0.906	$23^{+0.5}_{-0.5}$
D	$1\ ^1/_2$"	$38.1^{+0.13}_{-0.12}$
E	1.465	$\emptyset\ 37.2^{+0.4}_{-0.4}$
F	3"	$\emptyset\ 76.2^{+.01}_{-0}$
G	3.437	$\emptyset\ 87.3^{+0}_{-0.1}$

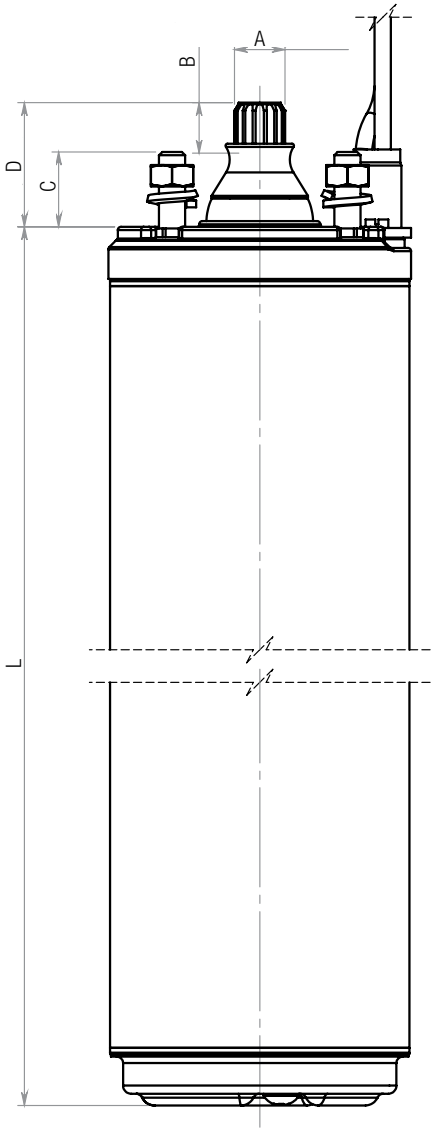

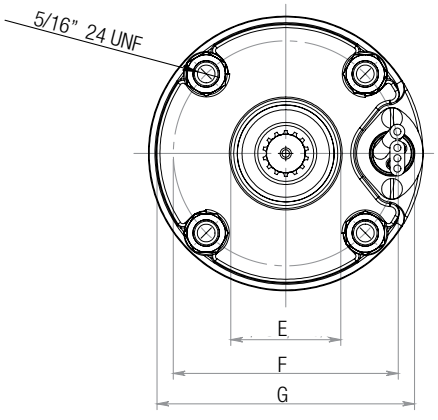

USA VERSION

KIT CABLE CONNECTOR	DESCRIPTION	CODE
 C US 190906	**KIT CABLE - FT 5,58** • CABLES WITH DIFFERENT LENGTH • DIFFERENT SUPPLY VOLTAGES • CSA CERTIFIED VERSION	60141970

4GG

SUBMERSIBLE MOTOR 4"



4" Asynchronous two-poles submersible motor, made in AISI 304 stainless steel for parts in contact with water. Cooling and lubrication of the thrust bearing assembly and carbon bushes is provided by a mixture of water and glycol. Squirrel-cage rotor mounted on Kingsbury self-centring thrust bearing. Stator housed in an airtight stainless steel casing (canned-type) with both flangs and shell in AISI 304L stainless steel.
Removable cable connector to allow fast and easy maintenance. The cable is certified ACS, WRAS and KTW. Motor suitable for use with variable frequency drive (30 Hz – 50/60 Hz). Capacitor and manually re-settable overload protection located in the electric panel that can be supplied separately for the single-phase 50 Hz version. For the single-phase 60 Hz version the thermal protection is included in the motor (from 0.5 HP to 1 HP). Overload protection must be provided by user for the three-phase version.

Flange NEMA 4"
Insulation class F
Degree of protection IP68
Cooling flow 1.0 ft/sec @ 95 °F (min. 0.3 m/s @ 35°C)
Voltage tolerance + 6% / -10%
Max starts 20/h
Max operating depth 984 ft (300 m)
Horizontal operation 0.5 HP - 10 HP
Motor maximum diameter 3.9" (99 mm)

ACCESSORIES PAG. 117

TECHNICAL DATA - *SINGLE PHASE MOTORS*

MODEL	3 WIRE CODE	V [V]	P2 [HP]	P2 [kW]	SF	In [A]	In (SF) [A]	Is/In	CsCn	P1 [W]	N [min⁻¹]	Cos φ	η %	C1 [µF]	C2 [µF]	CABLE Dia [AWG]	CABLE lenght ft	CABLE lenght m
4GG - 1/2 HP	60174199	115	0.5	0.37	1.6	10.0	12.6	4.0	3.2	800	3450	0.71	48	-	250-300	4x14	5½	1.7
4GG - 1/2 HP	60174200	230			1.6	5.5	6.8	4.2	3.9	800	3450	0.62	46	-	59-71	4x14	5½	1.7
4GG - 3/4 HP	60174201	230	0.75	0.55	1.5	7.4	8.6	4.6	3.6	1100	3450	0.65	53	-	86-103	4x14	5½	1.7
4GG - 1 HP	60174202	230	1	0.75	1.4	8.0	9.8	5.5	2.9	1350	3450	0.68	58	-	105-126	4x14	5½	1.7
4GG - 1 1/2 HP	60174203	230	1.5	1.1	1.3	10.0	12.0	6.0	1.9	1800	3450	0.81	64	10	105-126	4x14	5½	1.7
4GG - 2 HP	60174204	230	2	1.5	1.25	10.5	12.3	5.3	2.3	2200	3450	0.95	69	20	105-126	4x14	5½	1.7
4GG - 3 HP	60174205	230	3	2.2	1.15	14.3	16.2	5.5	2.1	3100	3450	0.97	72	45	208-250	4x14	5½	1.7
4GG - 5 HP	60174206	230	5	3.7	1.15	22.2	25.5	5.5	1.8	5000	3450	0.99	74	2x40	270-324	4x14	8 ¾	2.7

V: Rated voltage
P2: Rated output
SF: Service factor
In: Rated current
In (SF): Service factor current
Is/In: Locked rotor current/Rated current
Cs/Cn: Locked rotor Torque/Rated Torque
P1: Power consumption
N: R.P.M
Cos φ: Power factor
η: Efficiency
C: Capacitor
Ø: Cable section
LC: Cable length

DAB PUMPS reserves the right to make modifications without notice

4GG

SUBMERSIBLE MOTOR 4"

TECHNICAL DATA - *THREE PHASE MOTORS*

MODEL	3 WIRE CODE	V [V]	P2 [HP]	P2 [kW]	SF	In [A]	In (SF) [A]	Is/In	Cs/Cn	P1 [W]	N [min^{-1}]	Cos φ	η %	C [µF]	CABLE Dia [AWG]	CABLE Lenght ft	CABLE Lenght m
4GG - 1/2 HP	60121248	230	0.5	0.37	1.6	3.2	3.8	4.4	3.2	870	3450	0.4	42	-	4x14	5½	1.7
	60140361	460			1.6	1.6	1.9	5	3.2	870	3450	0.4	42	-	4x14	5½	1.7
	TBD	575			1.6	1.3	1.5	5	3.2	650	3450	0,54	57	-	4x14	5½	1.7
4GG - 3/4 HP	60121249	230	0.75	0.55	1.5	4.4	4.8	5.2	3.6	1140	3450	0.47	48	-	4x14	5½	1.7
	60121252	460			1.5	2.2	2.4	5.5	3.6	1140	3450	0.47	48	-	4x14	5½	1.7
	TBD	575			1.5	1.8	1.9	5.5	3.6	840	3450	0.48	65	-	4x14	5½	1.7
4GG - 1 HP	60121254	230	1	0.75	1.4	5.2	5.6	6.4	4.2	1260	3450	0.59	59	-	4x14	5½	1.7
	60121256	460			1.4	2.6	2.8	5.8	4.2	1260	3450	0.59	59	-	4x14	5½	1.7
	TBD	575			1.4	2.1	2.2	5.8	4.2	1200	3450	0.59	63	-	4x14	5½	1.7
4GG - 1 1/2 HP	60140362	230	1.5	1.1	1.3	7.2	7.8	5.9	4.1	1875	3450	0.53	60	-	4x14	5½	1.7
	60121259	460			1.25	3.6	3.9	6.7	4.1	1875	3450	0.53	60	-	4x14	5½	1.7
	TBD	575			1.3	2.9	3.1	6.7	4.1	1720	3450	0.60	64	-	4x14	5½	1.7
4GG - 2 HP	60140363	230	2	1.5	1.15	9,2	9.8	6.1	3.8	2230	3450	0.57	67	-	4x14	5½	1.7
	60121268	460			1.15	4.6	4.9	6.7	3.8	2230	3450	0.57	67	-	4x14	5½	1.7
	TBD	575			1.25	3.7	6.1	6.7	3.8	2160	3450	0.59	69	-	4x14	5½	1.7
4GG - 3 HP	60140364	230	3	2.2	1.15	11.2	12	7.5	4.8	3160	3450	0.69	71	-	4x14	5½	1.7
	60140365	460			1.15	5.6	6	7.1	4.8	3160	3450	0.69	71	-	4x14	5½	1.7
	TBD	575			1.15	4.5	4.8	7.1	4.8	3050	3450	0.68	72	-	4x14	5½	1.7
4GG - 5 HP	60140368	230	5	4	1.15	17.8	19.2	7.4	4	5230	3450	0.7	77	-	4x14	8 ¾	1.7
	60140369	460			1.15	8.9	9.6	7.4	4	5230	3450	0.7	77	-	4x14	8 ¾	1.7
	TBD	575			1.15	7.1	7.7	7.4	4.4	5300	3450	0.75	75	-	4x14	8 ¾	1.7
4GG - 7.5 HP	60140370	230	7.5	5.5	1.15	24	26	7.5	3.8	7100	3450	0.71	78	-	4x14	11½	3.5
	60140371	460			1.15	12	13	7.5	3.8	7100	3450	0.71	78	-	4x14	11½	3.5
	TBD	575			1.15	9.6	10.4	7.5	3.8	7050	3450	0.74	79	-	4x14	11½	3.5
4GG - 10 HP	60140372	460	10	7.5	1.15	15.4	16.6	7.1	3.9	9300	3450	0.78	80	-	4x14	11½	3.5
	TBD	575			1.15	12.3	13.5	7.1	3.9	9100	3450	0.74	82	-	4x14	11½	3.5

P2: Rated output
V: Rated voltage
SF: Service factor
In: Rated current
In (SF): Service factor current
Is/In: Locked rotor current/Rated current
Cs/Cn: Locked rotor Torque/Rated Torque
P1: Power consumption
N: R.P.M
Cos φ: Power factor
η: Efficiency
C: Capacitor
Ø: Cable section
LC: Cable length

4GG

SUBMERSIBLE MOTOR 4"

DIMENSIONS AND WEIGHTS - *SINGLE PHASE MOTORS*

MODEL	L LENGTH inch	L LENGTH mm	WEIGHT lbs	WEIGHT kg	AXIAL THRUST lbf	AXIAL THRUST N	Q.TY x PALLET
4GG - 1/2 HP - 0.37KW	10.472	266	19.4	8.8	500	2000	N/A
4GG - 3/4 HP - 0.55KW	11.26	286	21.4	9.7	500	2000	N/A
4GG - 1 HP - 0.75KW	13.622	346	27.8	12.6	700	3000	N/A
4GG - 1 1/2 HP - 1.1KW	16.181	411	32.5	14.7	700	3000	N/A
4GG - 2 HP - 1.5KW	16.181	411	32.7	14.8	700	3000	N/A
4GG - 3 HP - 2.2KW	21.417	544	45.2	20.5	1500	6000	N/A
4GG - 5 HP - 3.7KW	26.929	684	59.8	27.1	1500	6000	N/A

DIMENSIONS AND WEIGHTS - *THREE PHASE MOTORS*

MODEL	L LENGTH inch	L LENGTH mm	WEIGHT lbs	WEIGHT kg	AXIAL THRUST lbf	AXIAL THRUST N	Q.TY x PALLET
4GG - 1/2 HP - 0.37KW	9.291	236	16.3	7.4	500	2000	N/A
4GG - 3/4 HP - 0.55KW	10.472	266	19.4	8.8	500	2000	N/A
4GG - 1 HP - 0.75KW	11.26	286	21.4	9.7	500	2000	N/A
4GG - 1 1/2 HP - 1.1KW	13.622	346	25.8	11.7	700	3000	N/A
4GG - 2 HP - 1.5KW	15.394	391	30.5	13.8	700	3000	N/A
4GG - 3 HP - 2.2KW	19.843	504	40.8	18.5	1500	6000	N/A
4GG - 5 HP - 3.7KW	24.173	614	51.9	23.5	1500	6000	N/A
4GG - 7.5 HP - 5.5KW	26.929	684	59.8	27.1	1500	6000	N/A
4GG - 10 HP - 7.5KW	30.079	764	68.7	31.2	1500	6000	N/A

POS.	inch	mm	POS.	inch	mm	POS.	inch	mm
A	0.610	Ø $15.5^{+0.05}_{-0.03}$	**D**	$1\,^{1}/_{2}$"	$38.17^{+0.13}_{-0.12}$	**F**	3"	Ø $76.2^{+.01}_{-0}$
B	0.591	$15^{+0.5}_{-0}$	**E**	1.465	$37.2^{+0.4}_{-0.4}$	**G**	$3\,^{3}/_{8}$"	Ø $87.3^{+0}_{-0.1}$
C	7/8"	$23^{+0.5}_{-0}$						

KIT CABLE CONNECTOR *USA VERSION*	DESCRIPTION	CODE
 C SP US 190906	**KIT CABLE CONNECTOR - FT 5.58**	60141967
	KIT CABLE CONNECTOR - FT 8.86	60141968
	KIT CABLE CONNECTOR - FT 9.84	60141969

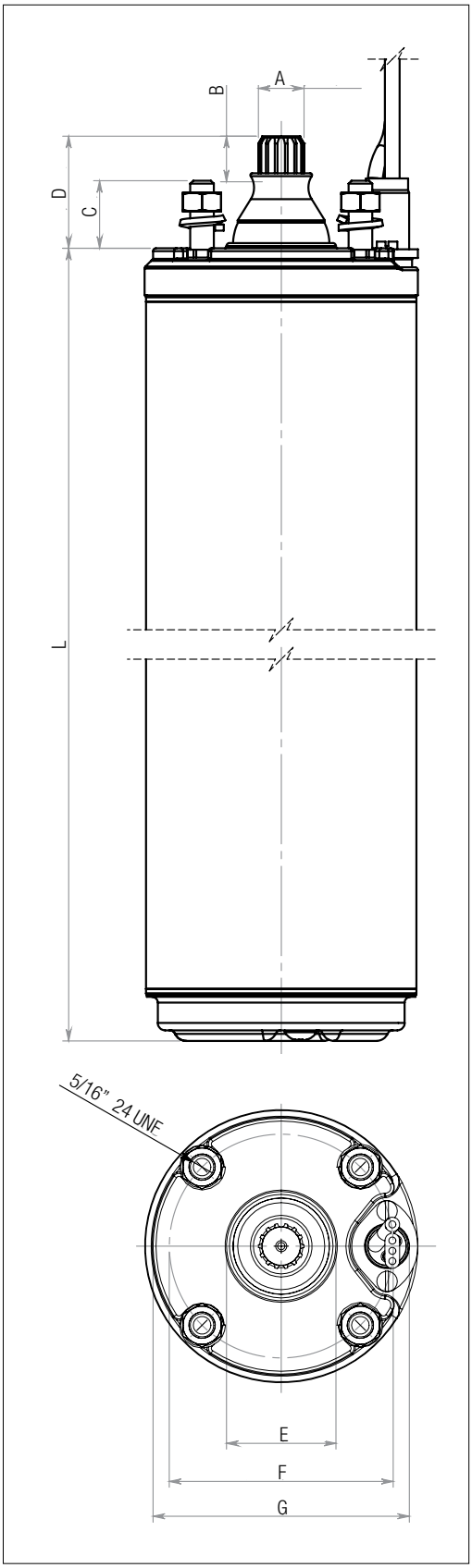

DAB PUMPS reserves the right to make modifications without notice

4GX

SUBMERSIBLE MOTOR 4"



4" Asynchronous two-poles submersible motor, made in AISI 304 stainless steel for parts in contact with water. Cooling and lubrication of the thrust bearing assembly and carbon bushes is provided by a mixture of water and glycol. Squirrel-cage rotor mounted on Kingsbury self-centring thrust bearing. Stator housed in an airtight stainless steel casing (canned-type) with both flangs and shell in AISI 304L stainless steel.
Removable cable connector to allow fast and easy maintenance. The cable is certified ACS, WRAS and KTW. Motor suitable for use with variable frequency drive (30 Hz – 50/60 Hz). Capacitor and manually re-settable overload protection located in the electric panel that can be supplied separately for the single-phase 50 Hz version. For the single-phase 60 Hz version the thermal protection is included in the motor (from 0.5 HP to 1 HP). Overload protection must be provided by user for the three-phase version.

Flange NEMA 4"
Insulation class F
Degree of protection IP68
Cooling flow 1.0 ft/sec @ 95 °F (min. 0.3 m/s @ 35°C)
Voltage tolerance + 6% / -10%
Max starts 20/h
Max operating depth 984 ft (300 m)
Horizontal operation 0.5 HP - 10 HP
Motor maximum diameter 3.9" (99 mm)

ACCESSORIES PAG. 117

TECHNICAL DATA - *SINGLE PHASE MOTORS*

MODEL	3 WIRE CODE	V [V]	P2 [HP]	P2 [kW]	SF	In [A]	In (SF) [A]	Is/In	CsCn	P1 [W]	N [min⁻¹]	Cos φ	η %	C1 [µF]	C2 [µF]	CABLE Dia AWG	CABLE lenght ft	CABLE lenght m
4GX - 1/2 HP	TBD	115	0.5	0.37	1.6	10.0	12.6	4.0	3.2	800	3450	0.71	48	-	250-300	4x14	5½	1.7
4GX - 1/2 HP	TBD	230			1.6	5.5	6.8	4.2	3.9	800	3450	0.62	46	-	59-71	4x14	5½	1.7
4GX - 3/4 HP	60143815	230	0.75	0.55	1.5	7.4	8.6	4.6	3.6	1100	3450	0.65	53	-	86-103	4x14	5½	1.7
4GX - 1 HP	60143816	230	1	0.75	1.4	8.0	9.8	5.5	2.9	1350	3450	0.68	58	-	105-126	4x14	5½	1.7
4GX - 1 1/2 HP	60143817	230	1.5	1.1	1.3	10.0	12.0	6.0	1.9	1800	3450	0.81	64	10	105-126	4x14	5½	1.7
4GX - 2 HP	TBD	230	2	1.5	1.25	10.5	12.3	5.3	2.3	2200	3450	0.95	69	20	105-126	4x14	5½	1.7
4GX - 3 HP	TBD	230	3	2.2	1.15	14.3	16.2	5.5	2.1	3100	3450	0.97	72	45	208-250	4x14	5½	1.7
4GX - 5 HP	TBD	230	5	3.7	1.15	22.2	25.5	5.5	1.8	5000	3450	0.99	74	2x40	270-324	4x14	8 ¾	2.7

V: Rated voltage
P2: Rated output
SF: Service factor
In: Rated current
In (SF): Service factor current
Is/In: Locked rotor current/Rated current
Cs/Cn: Locked rotor Torque/Rated Torque
P1: Power consumption
N: R.P.M
Cos φ: Power factor
η: Efficiency
C: Capacitor
Ø: Cable section
LC: Cable length

4GX

SUBMERSIBLE MOTOR 4"

TECHNICAL DATA - *THREE PHASE MOTORS*

MODEL	3 WIRE CODE	V [V]	P2 [HP]	P2 [kW]	SF	In [A]	In (SF) [A]	Is/In	Cs/Cn	P1 [W]	N [min⁻¹]	Cos φ	η %	C [µF]	CABLE Dia AWG	CABLE Lenght ft	CABLE Lenght m
4GX - 1/2 HP	TBD	230	0.5	0.37	1.6	3.2	3.8	4.4	3.2	870	3450	0.4	42	-	4x14	5½	1.7
	TBD	460			1.6	1.6	1.9	5	3.2	870	3450	0.4	42	-	4x14	5½	1.7
	TBD	575			1.6	1.3	1.5	5	3.2	650	3450	0,54	57	-	4x14	5½	1.7
4GX - 3/4 HP	TBD	230	0.75	0.55	1.5	4.4	4.8	5.2	3.6	1140	3450	0.47	48	-	4x14	5½	1.7
	TBD	460			1.5	2.2	2.4	5.5	3.6	1140	3450	0.47	48	-	4x14	5½	1.7
	TBD	575			1.5	1.8	1.9	5.5	3.6	840	3450	0.48	65	-	4x14	5½	1.7
4GX - 1 HP	TBD	230	1	0.75	1.4	5.2	5.6	6.4	4.2	1260	3450	0.59	59	-	4x14	5½	1.7
	TBD	460			1.4	2.6	2.8	5.8	4.2	1260	3450	0.59	59	-	4x14	5½	1.7
	TBD	575			1.4	2.1	2.2	5.8	4.2	1200	3450	0.59	63	-	4x14	5½	1.7
4GX - 1 1/2 HP	60152125	230	1.5	1.1	1.3	7.2	7.8	5.9	4.1	1875	3450	0.53	60	-	4x14	5½	1.7
	TBD	460			1.25	3.6	3.9	6.7	4.1	1875	3450	0.53	60	-	4x14	5½	1.7
	TBD	575			1.3	2.9	3.1	6.7	4.1	1720	3450	0.60	64	-	4x14	5½	1.7
4GX - 2 HP	60177172	230	2	1.5	1.15	9,2	9.8	6.1	3.8	2230	3450	0.57	67	-	4x14	5½	1.7
	TBD	460			1.15	4.6	4.9	6.7	3.8	2230	3450	0.57	67	-	4x14	5½	1.7
	TBD	575			1.25	3.7	6.1	6.7	3.8	2160	3450	0.59	69	-	4x14	5½	1.7
4GX - 3 HP	TBD	230	3	2.2	1.15	11.2	12	7.5	4.8	3160	3450	0.69	71	-	4x14	5½	1.7
	TBD	460			1.15	5.6	6	7.1	4.8	3160	3450	0.69	71	-	4x14	5½	1.7
	TBD	575			1.15	4.5	4.8	7.1	4.8	3050	3450	0.68	72	-	4x14	5½	1.7
4GX - 5 HP	TBD	230	5	4	1.15	17.8	19.2	7.4	4	5230	3450	0.7	77	-	4x14	5½	1.7
	TBD	460			1.15	8.9	9.6	7.4	4	5230	3450	0.7	77	-	4x14	5½	1.7
	TBD	575			1.15	7.1	7.7	7.4	4.4	5300	3450	0.75	75	-	4x14	5½	1.7
4GX - 7.5 HP	TBD	230	7.5	5.5	1.15	24	26	7.5	3.8	7100	3450	0.71	78	-	4x14	11½	1.7
	TBD	460			1.15	12	13	7.5	3.8	7100	3450	0.71	78	-	4x14	11½	3.5
	TBD	575			1.15	9.6	10.4	7.5	3.8	7050	3450	0.74	79	-	4x14	11½	3.5
4GX - 10 HP	TBD	460	10	7.5	1.15	15.4	16.6	7.1	3.9	9300	3450	0.78	80	-	4x14	11½	3.5
	TBD	575			1.15	12.3	13.5	7.1	3.9	9100	3450	0.74	82	-	4x14	11½	3.5

P2: Rated output
V: Rated voltage
SF: Service factor
In: Rated current
In (SF): Service factor current
Is/In: Locked rotor current/Rated current
Cs/Cn: Locked rotor Torque/Rated Torque
P1: Power consumption
N: R.P.M
Cos φ: Power factor
η: Efficiency
C: Capacitor
Ø: Cable section
LC: Cable length

DAB PUMPS reserves the right to make modifications without notice

4GX

SUBMERSIBLE MOTOR 4"

DIMENSIONS AND WEIGHTS - *SINGLE PHASE MOTORS*

MODEL	L LENGTH inch	L LENGTH mm	WEIGHT lbs	WEIGHT kg	AXIAL THRUST lbf	AXIAL THRUST N	Q.TY x PALLET
4GX - 1/2 HP - 0.37KW	10.472	266	20.3	9.2	500	2000	N/A
4GX - 3/4 HP - 0.55KW	11.26	286	22.3	10.1	500	2000	N/A
4GX - 1 HP - 0.75KW	13.622	346	28.7	13	700	3000	N/A
4GX - 1 1/2 HP - 1.1KW	16.181	411	33.3	15.1	700	3000	N/A
4GX - 2 HP - 1.5KW	16.181	411	33.5	15.2	700	3000	N/A
4GX - 3 HP - 2.2KW	21.417	544	39.7	18	1500	6000	N/A
4GX - 5 HP - 3.7KW	26.929	684	60.3	27.4	1500	6000	N/A

DIMENSIONS AND WEIGHTS - *THREE PHASE MOTORS*

MODEL	L LENGTH inch	L LENGTH mm	WEIGHT lbs	WEIGHT kg	AXIAL THRUST lbf	AXIAL THRUST N	Q.TY x PALLET
4GX - 1/2 HP - 0.37KW	9.291	236	17.2	7.8	500	2000	N/A
4GX - 3/4 HP - 0.55KW	10.472	266	20.3	9.2	500	2000	N/A
4GX - 1 HP - 0.75KW	11.26	286	22.3	10.1	500	2000	N/A
4GX - 1 1/2 HP - 1.1KW	13.622	346	26.7	12.1	700	3000	N/A
4GX - 2 HP - 1.5KW	15.394	391	31.3	14.2	700	3000	N/A
4GX - 3 HP - 2.2KW	19.843	504	33.3	15.1	1500	6000	N/A
4GX - 5 HP - 3.7KW	24.173	614	52.3	23.7	1500	6000	N/A
4GX - 7.5 HP - 5.5KW	26.929	684	60.3	27.4	1500	6000	N/A
4GX - 10 HP - 7.5KW	30.079	764	69.1	31.3	1500	6000	N/A

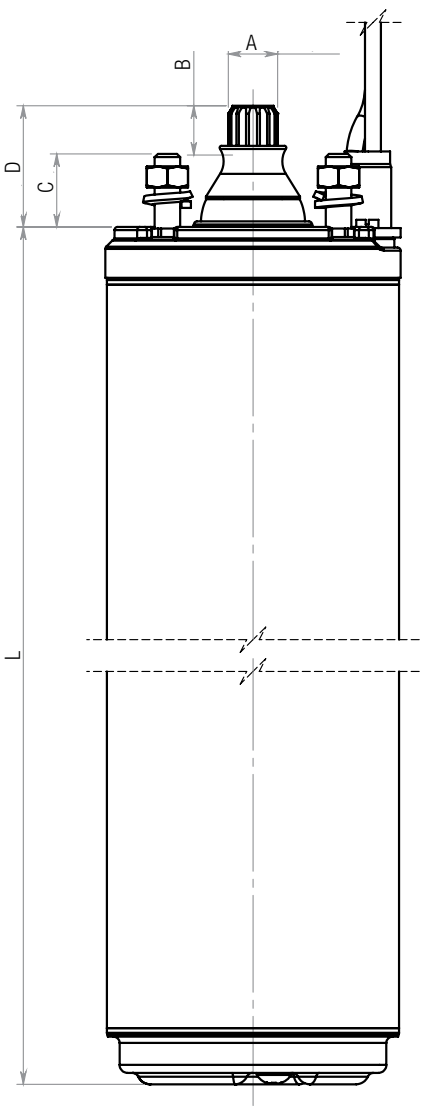

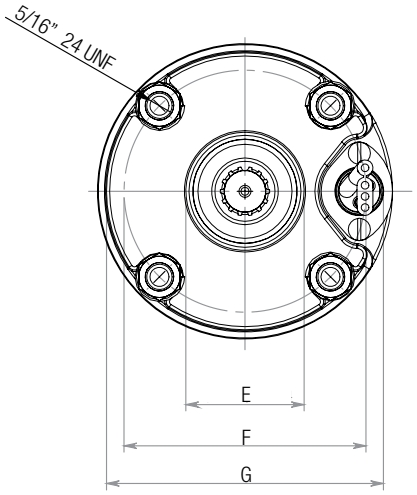

POS.	inch	mm	POS.	inch	mm	POS.	inch	mm
A	0.610	$\varnothing 15.5^{+0.05}_{-0.03}$	**D**	$1\,^{1}/_{2}$"	$38.17^{+0.13}_{-0.12}$	**F**	3"	$\varnothing 76.2^{+.01}_{-0}$
B	0.591	$15^{+0.5}_{-0}$	**E**	1.465	$37.2^{+0.4}_{-0.4}$	**G**	$3\,^{3}/_{8}$"	$\varnothing 87.3^{+0}_{-0.1}$
C	7/8"	$23^{+0.5}_{-0}$						

6GF

SUBMERSIBLE MOTOR 6"



6" Asynchronous two-poles submersible motor, made in AISI 304 stainless steel and cast iron with paint coating for parts in contact with water. Cooling and lubrication of the thrust bearing assembly and carbon bushes is provided by a mixture of water and glycol. Squirrel-cage rotor mounted on Kingsbury self-centring thrust bearing. Stator housed in an airtight stainless steel casing (canned-type). Removable cable connector to allow fast and easy maintenance. The cable is certified ACS, WRAS and KTW. Motor suitable for use with variable frequency drive (30 Hz-50/60 Hz). The motor is available in three-phase version with DOL or STAR-DELTA starting type. Overload protection must be provided by user.
The motor can be equipped also with a PT100 temperature sensor.

Flange NEMA 6"
Insulation class F
Degree of protection IP68
Cooling flow 1.0 ft/sec @ 95 °F (0.3 m/s @ 35°C)
Voltage tolerance + 6% / -10%
Max starts 25/h
Max operating depth 984 ft (300 m)
Horizontal operation 5.5 HP - 60 HP

ACCESSORIES PAG. 117

TECHNICAL DATA - *SINGLE PHASE MOTORS*

MODEL	3 WIRE	V [V]	P2		SF	In [A]	In (SF) [A]	Is/In	P1 [W]	N [min⁻¹]	Cos φ	η %	C [µF]		CABLE		
	CODE		[HP]	[kW]									Start	Run	Dia AWG	Lenght ft	Lenght m
6GF - 7.5 HP	60187218	230	7.5	5.5	1.15	33	37	15	7520	3490	0.72	74	486-584	45	4x10	13	4
6GF - 10 HP	60187219	230	10	7.5	1.15	43	49	20	9800	3490	0.76	77	616-740	70	4x10	13	4
6GF - 15 HP	60187220	230	15	11	1.15	63	74	30	14350	3490	0.77	76	701-841	135	4x8	13	4

TECHNICAL DATA - *THREE PHASE MOTORS*

MODEL	3 WIRE	V [V]	P2		SF	In [A]	In (SF) [A]	Is/In	P1 [W]	N [min⁻¹]	Cos φ	η %	Start *	CABLE		
	CODE		[HP]	[kW]										Dia AWG	Lenght ft	Lenght m
6GF - HP 5.5	60181824	230	5.5	4	1.15	18.5	20	5.1	5700	3450	0.77	70	Δ	4x10	13	4
	60181833	460			1.15	8.6	9.5	5.5	5700	3470	0.83	70	Y	4x10	13	4
	TBD	575			1.15	6.9	7.6	5.5	5700	3470	0.83	70	Y	4x10	13	4
6GF - HP 7.5	60181825	230	7.5	5.5	1.15	24	26.6	5	7400	3480	0.77	74	Δ	4x10	13	4
	60181834	460			1.15	12	13.3	5	7400	3480	0.77	74	Y	4x10	13	4
	TBD	575			1.15	9.6	10.6	5.0	7400	3470	0.77	74	Y	4x10	13	4
6GF - HP 10	60181826	230	10	7.5	1.15	34	37	4.8	9900	3465	0.73	76	Δ	4x10	13	4
	60181835	460			1.15	15	16.5	5.5	9900	3465	0.83	76	Y	4x10	13	4
	TBD	575			1.15	12.0	13.2	5.5	9900	3465	0.83	76	Y	4x10	13	4
6GF - HP 15	60181828	230	15	11	1.15	50	54	4.4	13400	3495	0.67	82	Δ	4x10	13	4
	60181837	460			1.15	21	23.3	5.2	13400	3495	0.8	82	Y	4x10	13	4
	TBD	575			1.15	16.8	18.6	5.2	13400	3480	0.80	82	Y	4x10	13	4

DAB PUMPS reserves the right to make modifications without notice

6GF

SUBMERSIBLE MOTOR 6"

MODEL	3 WIRE	V [V]	P2		SF	In [A]	In (SF) [A]	Is/In	P1 [W]	N [min^{-1}]	Cos φ	η %	Start *	CABLE		
	CODE		[HP]	[kW]										Dia	Lenght	
														AWG	ft	m
6GF - HP 20	60181830	230	20	15	1.15	63	68	4.8	18200	3475	0.73	82	Δ	4x10	13	4
	60181839	460			1.15	27.6	30.8	5.4	18200	3475	0.83	82	Y	4x10	13	4
	TBD	575			1.15	22.1	24.6	5.4	18200	3475	0.83	82	Y	4x10	13	4
6GF - HP 25	60181831	230	25	18.5	1.15	73.4	80	5.7	22200	3475	0.76	83	Δ	4x8	13	4
	60181840	460			1.15	36.7	40	5.7	22200	3475	0.76	83	Y	4x8	13	4
	TBD	575			1.15	29.3	33.2	5.7	22200	3475	0.76	83	Y	4x8	13	4
6GF - HP 30	60181832	230	30	22	1.15	95	105	5.5	26500	3480	0.7	83	Δ	4x8	13	4
	60181841	460			1.15	44.7	49.8	5.8	26500	3480	0.74	83	Y	4x8	13	4
	TBD	575			1.15	35.7	39.8	5.8	26500	3480	0.75	83	Y	4x8	13	4
6GF - HP 40	60181842	460	40	30	1.15	54	62	6.3	35700	3480	0.83	84	Y	4x8	13	4
	TBD	575			1.15	43.2	49.6	6.3	35700	3480	0.83	84	Y	4x8	13	4
6GF - HP 50	60181843	460	50	37	1.15	69	77	6.1	44800	3480	0.82	83	Y	4x8	13	4
	TBD	575			1.15	55.0	62.0	6.2	44800	3480	0.82	83	Y	4x8	13	4
6GF - HP 60	60181844	460	60	45	1.15	82	92	6.5	53500	3450	0.83	84	Y	4x8	13	4
	TBD	575			1.15	65.6	73.6	6.5	53500	3450	3450	3450	Y	4x8	13	4

* Star-delta version 230/380 V and 380/660 V available.

P2: Rated output
V: Rated voltage
SF: Service factor
In: Rated current
In (SF): Service factor current
Is/In: Locked rotor current/Rated current
Cs/Cn: Locked rotor Torque/Rated Torque
P1: Power consumption
N: R.P.M
Cos φ: Power factor
η: Efficiency
C: Capacitor
Ø: Cable section
LC: Cable length

6GF

SUBMERSIBLE MOTOR 6"

DIMENSIONS AND WEIGHTS - *SINGLE PHASE MOTORS*

MODEL	L LENGTH inch	L LENGTH mm	WEIGHT lbs	WEIGHT kg	AXIAL THRUST lbf	AXIAL THRUST N	Q.TY x PALLET
6GF - 7.5 HP - 5.5KW	28.74	730	154.5	70.1	3600	16000	N/A
6GF - 10 HP - 7.5KW	30.944	786	168	76.2	3600	16000	N/A
6GF - 15 HP - 11KW	33.897	861	185.2	84	3600	16000	N/A

DIMENSIONS AND WEIGHTS - *THREE PHASE MOTORS*

MODEL	L LENGTH inch	L LENGTH mm	WEIGHT lbs	WEIGHT kg	AXIAL THRUST lbf	AXIAL THRUST N	Q.TY x PALLET
6GF - HP 5.5 - 4KW	23.661	601	123.3	55.9	3600	16000	N/A
6GF - HP 7.5 - 5.5KW	24.843	631	130.7	59.3	3600	16000	N/A
6GF - HP 10 - 7.5KW	26.023	661	137.4	62.3	3600	16000	N/A
6GF - HP 15 - 11KW	28.779	731	162.1	73.5	3600	16000	N/A
6GF - HP 20 - 15KW	30.944	786	174.8	79.3	3600	16000	N/A
6GF - HP 25 - 18.5KW	33.897	861	192.1	87.1	3600	16000	N/A
6GF - HP 30 - 22KW	36.258	921	205.3	93.1	3600	16000	N/A
6GF - HP 40 - 30KW	41.377	1.051	236.6	107.3	6000	27000	N/A
6GF - HP 50 - 37KW	46.496	1.181	274.5	124.5	6000	27000	N/A
6GF - HP 60 - 45KW	53.582	1.361	311.5	141.3	6000	27000	N/A

POS.	inch	mm	POS.	inch	mm
A	1.535	Ø 39	**E**	0.236	$6^{+0}_{-0.2}$
B	0.984	Ø $25^{+0.1}_{-0}$	**F**	5.551	Ø 141
C	0.984	$25^{+0.5}_{-0}$	**G**	4.370	Ø $111^{+0.2}_{-0}$
D	2.867	$72.83^{+0.19}_{-0.18}$	**H**	3.000	Ø $76.15^{+0}_{-0.04}$

KIT CABLE CONNECTOR *USA VERSION*	DESCRIPTION	CODE
 C SP US 190906	**KIT CABLE CONNECTOR - FT 13.12**	SP00003221
	KIT CABLE CONNECTOR - FT 13.12	SP00003222

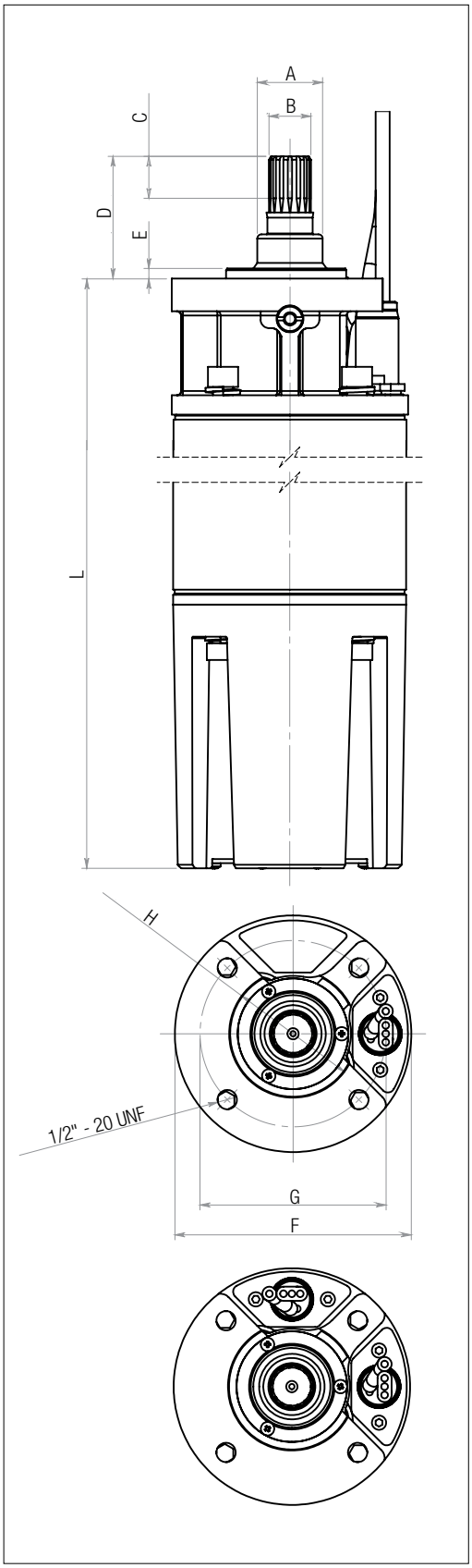

ON REQUEST

- CABLES WITH DIFFERENT LENGTH
- DIFFERENT SUPPLY VOLTAGES
- SINGLE PHASE VERSION (UP TO 15 HP)
- PT100 TEMPERATURE SENSOR
- PTC TEMPERATURE SENSOR (ONLY DOL VERSION)

DAB PUMPS reserves the right to make modifications without notice

TR8

SUBMERSIBLE MOTOR 8"



8" Asynchronous two-poles or four-poles submersible motor, rewindable type, with external shell made in AISI 316 stainless steel and supports in cast iron with paint coating (standard version). Cooling and lubrication of the thrust bearing assembly and carbon bushes is provided by a mixture of water and glycol. Squirrel-cage rotor mounted on Mitchell self-centring thrust bearing. The motor is available also in full stainless steel **AISI 316** version or **AISI 904** version. On request it's available also a version suitable for use with variable frequency drive (30 Hz-50/60 Hz). The motor is equipped with 5 meters three-core cable directly connected with the windings and it's available with DOL or STAR-DELTA starting type. The cable is certified ACS and WRAS and KTW. Overload protection must be provided by user. On request PT100 and PTC temperature sensors.

Flange NEMA 8"
Degree of protection IP58 - (IP68) optional
Cooling flow 1.64 ft/sec (0.5 m/s)
Voltage tolerance + 6% / -10%
Max starts 10/h
Max operating depth 984 ft (300 m)
Max operating pressure 870 psi (60 bar)
Horizontal operation 30 HP - 125 HP

ACCESSORIES PAG. 117

TECHNICAL DATA - *THREE PHASE MOTORS - 2 POLES*

DOL**

MODEL	STANDARD	AISI 316	V* [V]	P2		SF	In (SF) [A]	Is/In	P1 [W]	N [min-1]	Cos φ	η %	CABLE		
	CODE	CODE		[HP]	[kW]								dia	Lenght	
													AWG	ft	m
TR840 - 30KW	60175454	60146759	460	40	30	1.15	61	5.8	41566	3490	0.85	83	3x4+ 1 x4	16	5
	TBD	TBD	575			1.15	49	5.8	41968	3005	0.86	83	3x4+ 1 x4	16	5
TR850 - 37KW	60175455	60146760	460	50	37	1.15	74	5.5	50655	3490	0.85	84	3x4+ 1 x4	16	5
	TBD	TBD	575			1.15	58	5.8	50337	3460	0.84	81	3x4+ 1 x4	16	5
TR860 - 45KW	60175456	60146761	460	60	45	1.15	88	6.4	60174	3500	0.85	86	3x4+ 1 x4	16	5
	TBD	TBD	575			1.15	68	6.5	59262	3500	0.82	87	3x4+ 1 x4	16	5
TR875 - 55KW	60175457	60146762	460	75	55	1.15	107	5.8	73547	3500	0.86	86	3x4+ 1 x4	16	5
	TBD	TBD	575			1.15	85	6.5	74621	3485	0.88	3485	3x4+ 1 x4	16	5
TR885 - 63KW	60175458	60146763	460	85	63	1.15	120	6.0	84244	3510	0.86	86	3x4+ 1 x4	16	5
	TBD	TBD	575			1.15	97	6.4	86105	3485	0.89	80	3x4+ 1 x4	16	5
TR8100 - 75KW	60175459	60146764	460	100	75	1.15	143	5.7	99138	3500	0.86	87	3x4+ 1 x4	16	5
	TBD	TBD	575			1.15	112	5.8	99274	3470	0.89	86	3x4+ 1 x4	16	5
TR8125 - 92KW	60175460	60146765	460	125	92	1.15	175	6.0	121609	3480	0.87	87	3x4+ 1 x4	16	5
	TBD	TBD	575			1.15	133	5.6	118183	3460	0.89	83	3x4+ 1 x4	16	5
TR8150 - 110KW	60175461	60146767	460	150	110	1.15	210	5.8	147093	3480	0.87	86	3x4+ 1 x4	16	5
	TBD	TBD	575			1.15	167	5.7	144699	3490	0.87	86	3x4+ 1 x4	16	5

P2: Rated output
V: Rated voltage
SF: Service factor
In: Rated current
In (SF): Service factor current
Is/In: Locked rotor current/Rated current
Cs/Cn: Locked rotor Torque/Rated Torque
P1: Power consumption
N: R.P.M
Cos φ: Power factor
η: Efficiency
C: Capacitor
Ø: Cable section
LC: Cable length

* Available on request Voltage up to 1000 V
** Available on request STAR/DELTA version

TR8

SUBMERSIBLE MOTOR 8"

TECHNICAL DATA - *THREE PHASE MOTORS - 4 POLES*

DOL**

MODEL	STANDARD	AISI 316	V * [V]	P2		SF	In (SF) [A]	Is/In	P1 [W]	N [min-1]	Cos φ	η %	CABLE		
	CODE	CODE		[HP]	[kW]								Dia	Lenght	
													AWG	ft	m
TR815 - 11KW	60175462	60161133	460	15	11	1.15	25	5.0	15427	1750	0.78	82	3x4+ 1 x4	16	5
	TBD	TBD	575			1.15	20.4	5.0	16050	1755	0.79	80	3x4+ 1 x4	16	5
TR820 - 15KW	60175463	60161134	460	20	15	1.15	34	4.9	20783	1750	0.79	83	3x4+ 1 x4	16	5
	TBD	TBD	575			1.15	26.6	4.9	21756	1745	0.82	81	3x4+ 1 x4	16	5
TR825 - 18.5KW	60175464	60161135	460	25	18.5	1.15	40	4.7	25327	1750	0.82	84	3x4+ 1 x4	16	5
	TBD	TBD	575			1.15	32.8	4.7	26787	1745	0.82	81	3x4+ 1 x4	16	5
TR830 - 22KW	60175465	60161136	460	30	22	1.15	47	4.7	30119	1750	0.81	84	3x4+ 1 x4	16	5
	TBD	TBD	575			1.15	39.1	4.7	31558	1745	0.81	81	3x4+ 1 x4	16	5
TR835 - 26KW	60175466	60161137	460	35	26	1.15	56	4.7	36024	1750	0.82	83	3x4+ 1 x4	16	5
	TBD	TBD	575			1.15	45.8	4.7	36979	1750	0.77	0.81	3x4+ 1 x4	16	5
TR840 - 30KW	60175467	60161138	460	40	30	1.15	63	4.5	41071	1750	0.84	84	3x4+ 1 x4	16	5
	TBD	TBD	575			1.15	51.5	4.4	42588	1740	0.83	82	3x4+ 1 x4	16	5
TR850 - 37KW	60175468	60161139	460	50	37	1.15	78	4.5	50655	1750	0.83	84	3x4+ 1 x4	16	5
	TBD	TBD	575			1.15	63.7	4.5	52005	1755	0.82	84	3x4+ 1 x4	16	5
TR860 - 45KW	60175469	60161140	460	60	45	1.15	88	6.4	60174	1735	0.85	86	3x4+ 1 x4	16	5
	TBD	TBD	575			1.15	75.8	4.8	62625	1735	0.83	84	3x4+ 1 x4	16	5

P2: Rated output
V: Rated voltage
SF: Service factor
In: Rated current
In (SF): Service factor current
Is/In: Locked rotor current/Rated current
Cs/Cn: Locked rotor Torque/Rated Torque
P1: Power consumption
N: R.P.M
Cos φ: Power factor
η: Efficiency
C: Capacitor
Ø: Cable section
LC: Cable length

* Available on request Voltage up to 1000 V
** Available on request STAR/DELTA version

TR8

SUBMERSIBLE MOTOR 8"

DIMENSIONS AND WEIGHTS - *THREE PHASE MOTORS - 2 POLES*

MODEL	L LENGTH inch	L LENGTH mm	WEIGHT lbs	WEIGHT kg	AXIAL THRUST lbf
TR840 - 30KW	44	1.118	322	146	13500
TR850 - 37KW	46	1.168	344	156	13500
TR860 - 45KW	50	1.270	390	177	13500
TR875 - 55KW	53	1.346	423	192	13500
TR885 - 63KW	59	1.500	481	218	13500
TR8100 - 75KW	63	1.600	522	237	13500
TR8125 - 92KW	72	1.830	624	283	13500
TR8150 - 110KW	81	2.060	734	333	13500

DIMENSIONS AND WEIGHTS - *THREE PHASE MOTORS - 4 POLES*

MODEL	L LENGTH inch	L LENGTH mm	WEIGHT lbs	WEIGHT kg	AXIAL THRUST lbf
TR815 - 11KW	44	1.118	322	146	13500
TR820 - 15KW	46	1.168	344	156	13500
TR825 - 18.5KW	50	1.270	390	177	13500
TR830 - 22KW	53	1.346	423	192	13500
TR835 - 26KW	59	1.500	481	218	13500
TR840 - 30KW	63	1.600	522	237	13500
TR850 - 37KW	72	1.830	624	283	13500
TR860 - 45KW	72	1.830	624	283	13500

POS.	inch	mm	POS.	inch	mm	POS.	inch	mm
A	7.559	Ø 192	**E**	3.740	95	**I**	4 x 0.709"	4 x Ø 18
B	5"	Ø 127	**F**	5.906	150	**J**	2.677	68
C	1 ½"	Ø 38	**G**	7.283	185	**K**	6.004	Ø 153
D	4"	102	**H**	9.567	243			

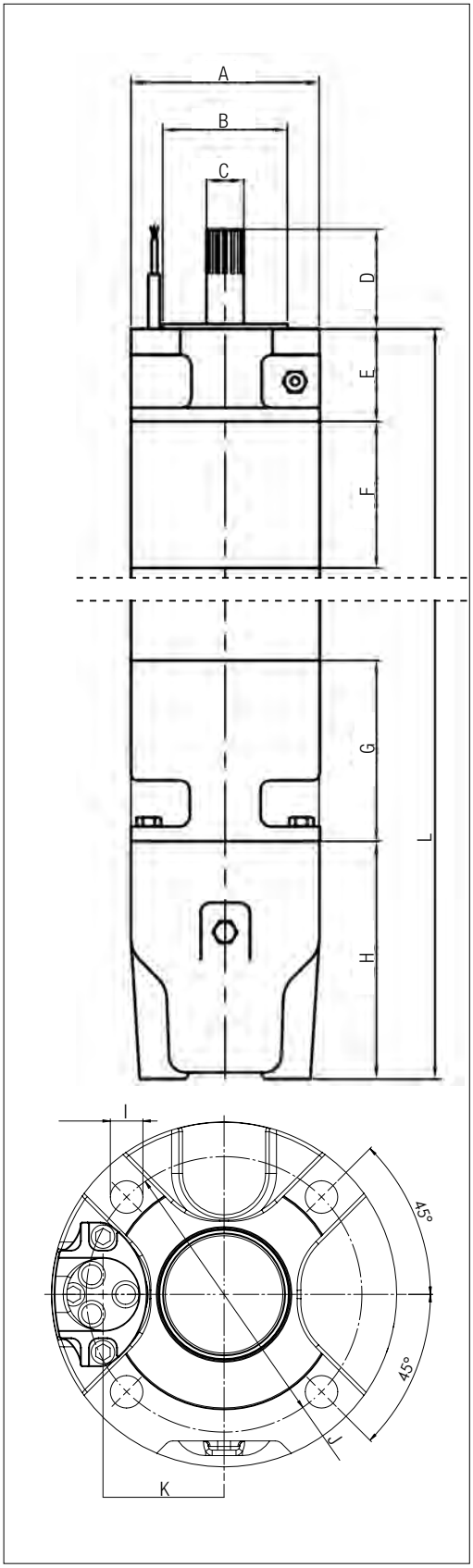

ON REQUEST

- CABLES WITH DIFFERENT LENGTH
- DIFFERENT SUPPLY VOLTAGES
- PT100 TEMPERATURE SENSOR
- PTC TEMPERATURE SENSOR
- SPECIAL TERMINAL SHAFT
- DEGREE OF PROTECTION IP 68

TR10

SUBMERSIBLE MOTOR 10"



10" Asynchronous two-poles or four-poles submersible motor, rewindable type, with external shell made in AISI 316 stainless steel and supports in cast iron with paint coating (standard version). Cooling and lubrication of the thrust bearing assembly and carbon bushes is provided by a mixture of water and glycol. Squirrel-cage rotor mounted on Mitchell self-centring thrust bearing. The motor is available also in full stainless steel **AISI 316** version or **AISI 904** version.
On request it's available also a version suitable for use with variable frequency drive (30 Hz-50/60 Hz). The motor is equipped with 8 meters single-core cables directly connected with the windings and it's available with DOL or STAR-DELTA starting type.
The cables are certified ACS and WRAS and KTW. Overload protection must be provided by user.
On request PT100 and PTC temperature sensors are available.

Flange NEMA 10"
Degree of protection IP58 - (IP68) optional
Cooling flow 1.64 ft/sec (0.5 m/s)
Voltage tolerance + 6% / -10%
Max starts 8/h
Max operating depth 984 ft (300 m)
Max operating pressure 870 psi (60 bar)
Horizontal operation 100 HP - 230 HP

ACCESSORIES PAG. 117

TECHNICAL DATA - *THREE PHASE MOTORS - 2 POLES*

DOL**

MODEL	STANDARD	AISI 316	V * [V]	P2		SF	In (SF) [A]	Is/In	P1 [W]	N [min-1]	Cos φ	η %	CABLE		
	CODE	CODE		[HP]	[kW]								Dia AWG	Lenght ft	Lenght m
TR10100 - 75KW	60146838	60146852	460	100	75	1.15	146	5.7	99138	3510	0.84	87	3x0+1x3	26	8
	TBD	TBD	575			1.15	121	5.4	102431	3485	0.85	85	3x0+1x3	26	8
TR10125 - 92KW	60146839	60146853	460	125	92	1.15	181	5.5	121609	3510	0.83	87	3x0+1x3	26	8
	TBD	TBD	575			1.15	148	5.6	125288	3485	0.85	85	3x0+1x3	26	8
TR10150 - 110KW	60146840	60146854	460	150	110	1.15	213	5.8	143750	3510	0.84	88	3x0+1x3	26	8
	TBD	TBD	575			1.15	172	5.7	147318	3495	0.86	86	3x0+1x3	26	8
TR10180 - 132KW	60146841	60146855	460	180	132	1.15	252	5.7	172500	3510	0.85	88	3x0+1x3	26	8
	TBD	TBD	575			1.15	190	5.7	168834	3485	0.89	90	3x0+1x3	26	8
TR10200 - 147KW	60146842	60146856	460	200	147	1.15	290	6.2	194310	3520	0.82	87	3x0+1x3	26	8
	TBD	TBD	575			1.15	229	6.2	198419	3500	0.87	85	3x0+1x3	26	8
TR10230 - 170KW	60146843	60146857	460	230	170	1.15	338	5.9	224713	3520	0.82	87	3x0+1x3	26	8
	TBD	TBD	575			1.15	271	6	226713	3515	0.84	86	3x0+1x3	26	8
TR10260 - 190KW	60146844	60146858	460	260	190	1.15	386	6.1	251149	3520	0.79	87	3x0+1x3	26	8
	TBD	TBD	575			1.15	286	5.9	247559	3500	0.87	84	3x0+1x3	26	8

V: Rated voltage
P2: Rated output
SF: Service factor
In: Rated current
In (SF): Service factor current
Is/In: Locked rotor current/Rated current
Cs/Cn: Locked rotor Torque/Rated Torque
P1: Power consumption
N: R.P.M
Cos φ: Power factor
η: Efficiency
C: Capacitor
Ø: Cable section
LC: Cable length

* Available on request Voltage up to 1000 V
** Available on request STAR/DELTA version

DAB PUMPS reserves the right to make modifications without notice

TR10

SUBMERSIBLE MOTOR 10"

TECHNICAL DATA - *THREE PHASE MOTORS - 4 POLES*

DOL**

MODEL	STANDARD	AISI 316	V * [V]	P2		SF	In (SF) [A]	Is/In	P1 [W]	N [min^{-1}]	Cos φ	η %	CABLE		
	CODE	CODE		[HP]	[kW]								Dia	Lenght	
													AWG	ft	m
TR1040 - 30KW	60161141	60161148	460	40	30	1.15	62	5.3	40116	1750	0.82	86	3x0+1x3	26	8
	TBD	TBD	575			1.15	49.6	5.3	40012	1755	0.81	86	3x0+1x3	26	8
TR1050 - 37KW	60161142	60161149	460	50	37	1.15	73	5.5	48908	1750	0.86	87	3x0+1x3	26	8
	TBD	TBD	575			1.15	61.6	5.5	49079	1760	0.81	87	3x0+1x3	26	8
TR1060 - 45KW	60161143	60161150	460	60	45	1.15	89	4.6	58807	1750	0.83	88	3x0+1x3	26	8
	TBD	TBD	575			1.15	72.4	4,6	59847	1750	0.83	86	3x0+1x3	26	8
TR1075 - 55KW	60161144	60161152	460	75	55	1.15	109	5.3	71875	1750	0.84	88	3x0+1x3	26	8
	TBD	TBD	575			1.15	88	5.3	71866	1755	0.82	88	3x0+1x3	26	8
TR10100 - 75KW	60161145	60161153	460	100	75	1.15	147	5.4	98011	1750	0.83	88	3x0+1x3	26	8
	TBD	TBD	575			1.15	119	5.4	97346	1755	0.82	88	3x0+1x3	26	8
TR10125 - 90KW	60161146	60161154	460	125	90	1.15	183	5.3	117614	1750	0.84	88	3x0+1x3	26	8
	TBD	TBD	575			1.15	145	5.3	121137	1750	0.84	87	3x0+1x3	26	8
TR10150 - 110KW	60161147	60161155	460	150	110	1.15	217	5.6	145230	1750	0.84	87	3x0+1x3	26	8
	TBD	TBD	575			1.15	174	5.6	145230	1745	0.84	87	3x0+1x3	26	8

V: Rated voltage
P2: Rated output
SF: Service factor
In: Rated current
In (SF): Service factor current
Is/In: Locked rotor current/Rated current
Cs/Cn: Locked rotor Torque/Rated Torque
P1: Power consumption
N: R.P.M
Cos φ: Power factor
η: Efficiency
C: Capacitor
Ø: Cable section
LC: Cable length

* Available on request Voltage up to 1000 V
** Available on request STAR/DELTA version

TR10

SUBMERSIBLE MOTOR 10"

DIMENSIONS AND WEIGHTS - *THREE PHASE MOTORS - 2 POLES*

MODEL	L LENGTH inch	L LENGTH mm	WEIGHT lbs	WEIGHT kg	AXIAL THRUST lbf	AXIAL THRUST N
TR10100 - 75KW	55	1400	617	280	13500	60000
TR10125 - 92KW	59	1500	728	330	13500	60000
TR10150 - 110KW	67	1690	849	385	13500	60000
TR10180 - 132KW	74	1870	959	435	13500	60000
TR10200 - 147KW	81	2070	1102	500	13500	60000
TR10230 - 170KW	87	2220	1190	540	13500	60000
TR10260 - 190KW	94	2400	1279	580	13500	60000

DIMENSIONS AND WEIGHTS - *THREE PHASE MOTORS - 4 POLES*

MODEL	L LENGTH inch	L LENGTH mm	WEIGHT lbs	WEIGHT kg	AXIAL THRUST lbf	AXIAL THRUST N
TR1040 - 30KW	50	1270	551	250	13500	60000
TR1050 - 37KW	55	1400	617	280	13500	60000
TR1060 - 45KW	59	1500	728	330	13500	60000
TR1075 - 55KW	67	1690	849	385	13500	60000
TR10100 - 75KW	74	1870	959	435	13500	60000
TR10125 - 90KW	81	2070	1102	500	13500	60000
TR10150 - 110KW	81	2.057	1200	544	13500	60000

POS.	inch	mm	POS.	inch	mm	POS.	inch	mm
A	9.134	Ø 232	**G**	8.268	210	**N**	3.071	78
B	5"	Ø 127	**H**	10.315	262	**O**	3.740	95
C	1.687	Ø 42.86	**I**	0.197	5	**P**	0.375	9.52
D	4"	101.6	**J**	7 ½"	Ø 190.5	**Q**	1.874	47.6
E	4.528	115	**K**	4 x 0.827"	4 x Ø 21			
F	7.874	200	**M**	1.693	Ø 43			

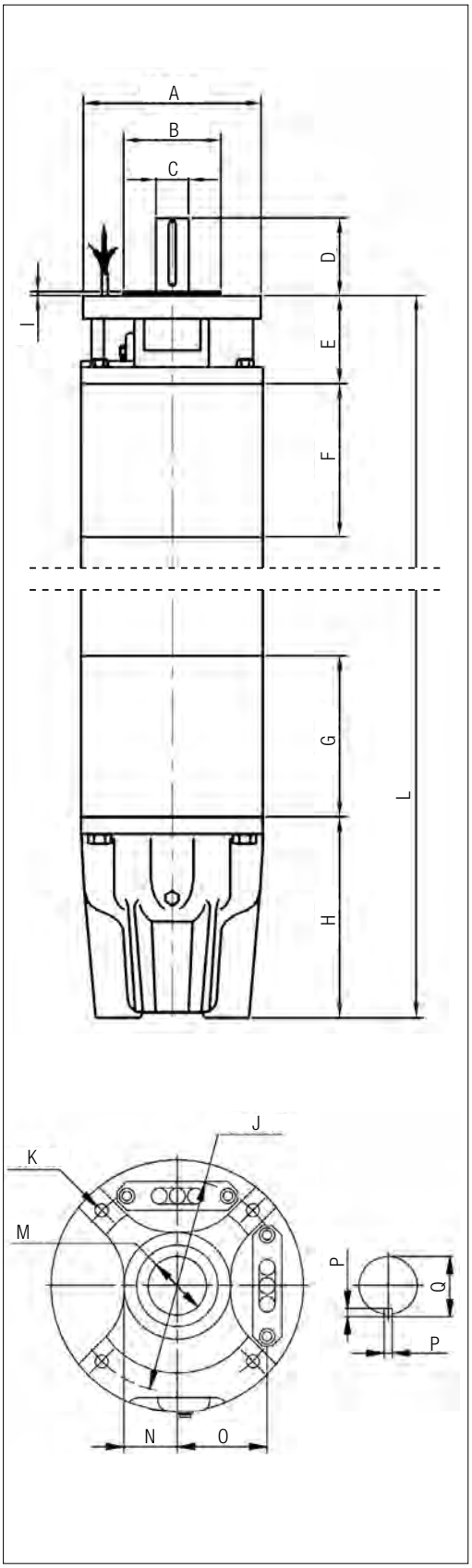

ON REQUEST

- CABLES WITH DIFFERENT LENGTH
- DIFFERENT SUPPLY VOLTAGES
- PT100 TEMPERATURE SENSOR
- PTC TEMPERATURE SENSOR
- SPECIAL TERMINAL SHAFT
- DEGREE OF PROTECTION IP 68

DAB PUMPS reserves the right to make modifications without notice

TR12

SUBMERSIBLE MOTOR 12"



12" Asynchronous two-poles or four-poles submersible motor, rewindable type, with external shell made in AISI 316 stainless steel and supports in cast iron with paint coating (standard version).
Cooling and lubrication of the thrust bearing assembly and carbon bushes is provided by a mixture of water and glycol. Squirrel-cage rotor mounted on Mitchell self-centring thrust bearing.
The motor is available also in full stainless steel **AISI 316** version and **AISI 904** version.
On request it's available also a version suitable for use with variable frequency drive (30 Hz-50/60 Hz). The motor is equipped with 8 meters single-core cables directly connected with the windings and it's available with DOL or STAR-DELTA starting type. The cables are certified ACS and WRAS and KTW. Overload protection must be provided by user.
On request PT100 and PTC temperature sensors are available.

Flange 12"
Degree of protection IP58 - (IP68) optional
Cooling flow 1.64 ft/sec (0.5 m/s)
Voltage tolerance + 6% / -10%
Max starts 5/h
Max operating depth 984 ft (300 m)
Max operating pressure 870 psi (60 bar)
Horizontal operation 200 HP - 260 HP

ACCESSORIES PAG. 117

TECHNICAL DATA - *THREE PHASE MOTORS - 2 POLES*

DOL**

MODEL	STANDARD	AISI 316	V* [V]	P2		SF	In (SF) [A]	Is/In	P1 [W]	N [min-1]	Cos φ	η %	CABLE		
	CODE	CODE		[HP]	[kW]								Dia	Lenght	
													AWG	ft	m
TR12180 - 132KW	60175573	60175595	460	180	132	1.15	267	5.7	178694	3530	0.84	86	3x00+1x0	26	8
	TBD	TBD	575			1.15	211	5.7	178620	3510	0.85	86	3x00+1x0	26	8
TR12200 - 147KW	60175574	60175596	460	200	147	1.15	311	5.7	168966	3530	0.83	87	3x00+1x0	26	8
	TBD	TBD	575			1.15	238	5.9	199106	3520	0.84	86	3x00+1x0	26	8
TR12230 - 170KW	60175575	60175597	460	230	170	1.15	355	5.8	195402	3530	0.84	87	3x00+1x0	26	8
	TBD	TBD	575			1.15	271	5.8	232111	3515	0.86	85	3x00+1x0	26	8
TR12260 - 190KW	60175576	60175598	460	260	190	1.15	394	6.1	218391	3525	0.84	87	3x00+1x0	26	8
	TBD	TBD	575			1.15	297	5.8	257338	3505	0.87	86	3x00+1x0	26	8
TR12300 - 220KW	60175577	60175599	460	300	220	1.15	452	6.4	250000	3525	0.85	88	3x00+1x0	26	8
	TBD	TBD	575			1.15	340	5.8	294596	3005	0.87	86	3x00+1x0	26	8
TR12340 - 250KW	60175578	60175600	460	340	250	1.15	510	6.8	284091	3525	0.85	88	3x00+1x0	26	8
	TBD	TBD	575			1.15	388	5.7	336186	3515	0.87	87	3x00+1x0	26	8

V: Rated voltage
P2: Rated output
SF: Service factor
In: Rated current
In (SF): Service factor current
Is/In: Locked rotor current/Rated current
Cs/Cn: Locked rotor Torque/Rated Torque
P1: Power consumption
N: R.P.M
Cos φ: Power factor
η: Efficiency
C: Capacitor
Ø: Cable section
LC: Cable length

* Available on request Voltage up to 1000 V
** Available on request STAR/DELTA version

TR12

SUBMERSIBLE MOTOR 12"

TECHNICAL DATA - *THREE PHASE MOTORS - 4 POLES* DOL**

MODEL	STANDARD	AISI 316	V * [V]	P2		SF	In (SF) [A]	Is/In	P1 [W]	N [min-1]	Cos φ	η %	CABLE		
	CODE	CODE		[HP]	[kW]								Dia AWG	Lenght ft	Lenght m
TR12100 - 75KW	60161156	60161162	460	100	75	1.15	145	6.5	96910	1750	0.86	89	3x00+1x0	26	8
	TBD	TBD	575			1.15	115	6.5	98669	1755	0,86	87	3x00+1x0	26	8
TR12125 - 92KW	60161157	60161163	460	125	92	1.15	180	6.5	118876	1750	0.87	89	3x00+1x0	26	8
	TBD	TBD	575			1.15	146	6.5	120356	1765	0,83	88	3x00+1x0	26	8
TR12150 - 110KW	60161158	60161164	460	150	110	1.15	211	5.8	142135	1750	0.88	89	3x00+1x0	26	8
	TBD	TBD	575			1.15	170	5.8	144250	1760	0,85	87	3x00+1x0	26	8
TR12180 - 132KW	60161159	60161165	460	180	132	1.15	252	5.8	170562	1750	0.88	89	3x00+1x0	26	8
	TBD	TBD	575			1.15	202	6.2	171340	1760	0,85	88	3x00+1x0	26	8
TR12200 - 147KW	60161160	60161166	460	200	147	1.15	281	5.9	189944	1750	0.88	89	3x00+1x0	26	8
	TBD	TBD	575			1.15	221	5.9	191314	1750	0,87	87	3x00+1x0	26	8

V: Rated voltage
P2: Rated output
SF: Service factor
In: Rated current
In (SF): Service factor current
Is/In: Locked rotor current/Rated current
Cs/Cn: Locked rotor Torque/Rated Torque
P1: Power consumption
N: R.P.M
Cos φ: Power factor
η: Efficiency
C: Capacitor
Ø: Cable section
LC: Cable length

* Available on request Voltage up to 1000 V
** Available on request STAR/DELTA version

DAB PUMPS reserves the right to make modifications without notice

TR12

SUBMERSIBLE MOTOR 12"

DIMENSIONS AND WEIGHTS - *THREE PHASE MOTORS - 2 POLES*

MODEL	L LENGTH inch	L LENGTH mm	WEIGHT lbs	WEIGHT kg	AXIAL THRUST lbf	AXIAL THRUST N
TR12180 - 132KW	66	1676	1135	515	16000	70000
TR12200 - 147KW	70	1790	1246	565	16000	70000
TR12230 - 170KW	74	1880	1334	605	16000	70000
TR12260 - 190KW	78	1980	1433	650	16000	70000
TR12300 - 220KW	83	2110	1543	700	16000	70000
TR12340 - 250KW	90	2280	1709	775	16000	70000

DIMENSIONS AND WEIGHTS - *THREE PHASE MOTORS - 4 POLES*

MODEL	L LENGTH inch	L LENGTH mm	WEIGHT lbs	WEIGHT kg	AXIAL THRUST lbf	AXIAL THRUST N
TR12100 - 75KW	65	1660	1135	515	16000	70000
TR12125 - 92KW	70	1790	1246	565	16000	70000
TR12150 - 110KW	74	1880	1334	605	16000	70000
TR12180 - 132KW	83	2110	1543	700	16000	70000
TR12200 - 147KW	87	2210	1653	750	16000	70000

POS.	inch	mm	POS.	inch	mm	POS.	inch	mm
A	9.055	Ø 230	**G**	10.039	255	**O**	5/8"	16
B	5 "	Ø 127	**H**	0.197	5	**P**	2.323	59
C	2.165	Ø 55	**I**	5 "	127	**Q**	0.394	10
D	3.543	90	**J**	11.260	286			
E	6 ½"	165	**K**	0.827	Ø 21			
F	4.331	110	**M**	7 ½"	190.5			

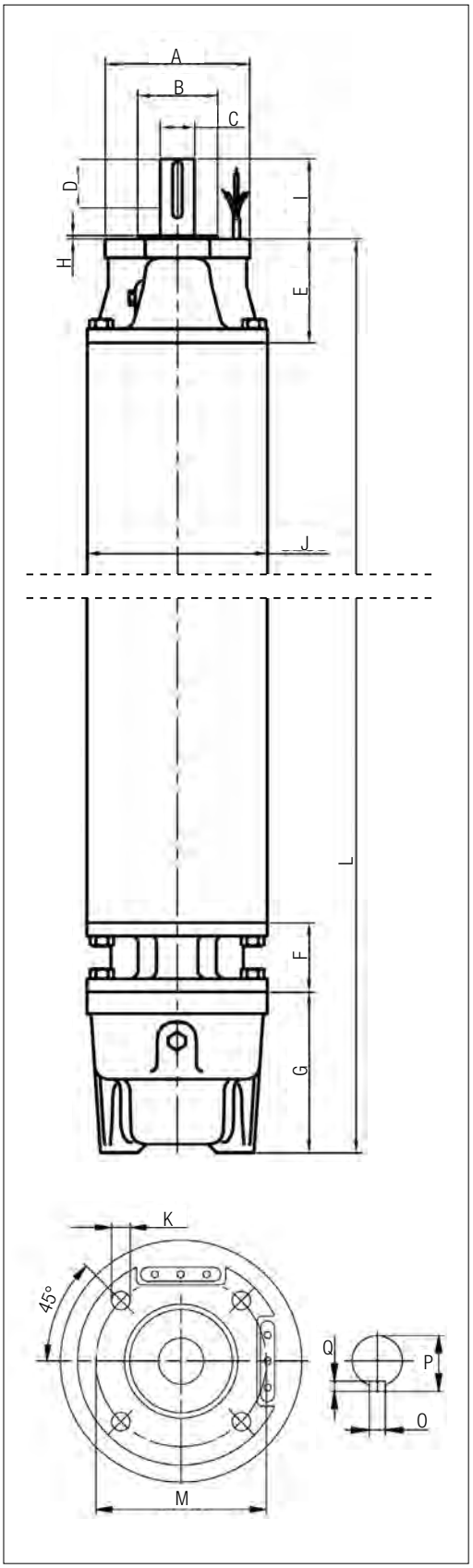

ON REQUEST

- CABLES WITH DIFFERENT LENGTH
- DIFFERENT SUPPLY VOLTAGES
- PT100 TEMPERATURE SENSOR
- PTC TEMPERATURE SENSOR
- SPECIAL TERMINAL SHAFT

TR14

SUBMERSIBLE MOTOR 14"



14" Asynchronous two-poles or four-poles submersible motor, rewindable type, with external shell made in AISI 316 stainless steel and supports in cast iron with paint coating (standard version).
Cooling and lubrication of the thrust bearing assembly and carbon bushes is provided by a mixture of water and glycol. Squirrel-cage rotor mounted on Mitchell self-centring thrust bearing. The motor is available also in full stainless steel AISI 316.
On request it's available also a version suitable for use with variable frequency drive (30 Hz-50/60 Hz). The motor is equipped with 8 meters single-core cables directly connected with the windings and it's available with DOL or STAR-DELTA starting type. The cables are certified ACS and WRAS and KTW. Overload protection must be provided by user.
On request PT100 and PTC temperature sensors are available.

Flange 14"
Degree of protection IP58 - (IP68) optional
Cooling flow 1.64 ft/sec (0.5 m/s)
Voltage tolerance + 6% / -10%
Max starts PVC: 3/h - PE2+PA: 5/H
Max operating depth 984 ft (300 m)
Max operating pressure 870 psi (60 bar)
Horizontal operation 300 HP - 340 HP

ACCESSORIES PAG. 117

TECHNICAL DATA - *THREE PHASE MOTORS - 2 POLES*

S/D**

MODEL	STANDARD	AISI 316	V* [V]	P2		SF	In (SF) [A]	Is/In	P1 [W]	N [min-1]	Cos φ	η %	CABLE		
	CODE	CODE		[HP]	[kW]								Dia AWG	Lenght ft	Lenght m
TR14300 - 220KW	TBD	TBD	460	300	220	1.15	460	5.5	290000	3530	0.79	89	6x00+1x0	26	8
	TBD	TBD	575			1.15	370	5.5	298803	3525	0.81	89	6x00+1x0	26	8
TR14340 - 250KW	TBD	TBD	460	340	250	1.15	505	6.0	326000	3545	0.81	89	6x00+1x0	26	8
	TBD	TBD	575			1.15	404	6.0	337979	3535	0.84	89	6x00+1x0	26	8
TR14400 - 300KW	TBD	TBD	460	400	300	1.15	595	6.0	389000	3540	0.82	89	6x00+1x0	26	8
	TBD	TBD	575			1.15	479	5.8	400889	3535	0.84	89	6x00+1x0	26	8
TR14450 - 330KW	TBD	TBD	460	450	330	1.15	645	6.0	427000	3545	0.83	90	6x00+1x0	26	8
	TBD	TBD	575			1.15	512	6.0	423230	3540	0.83	89	6x00+1x0	26	8
TR14500 - 370KW	TBD	TBD	460	500	370	1.15	725	6.5	480000	3550	0.83	90	6x00+1x0	26	8
	TBD	TBD	575			1.15	581	6.4	474317	3545	0.82	89	6x00+1x0	26	8
TR14550 - 400KW	TBD	TBD	460	550	400	1.15	750	6.5	520000	3540	0.87	90	6x00+1x0	26	8
	TBD	TBD	575			1.15	598	6.8	517796	3535	0. 87	90	6x00+1x0	26	8

V: Rated voltage
P2: Rated output
SF: Service factor
In: Rated current
In (SF): Service factor current
Is/In: Locked rotor current/Rated current
Cs/Cn: Locked rotor Torque/Rated Torque
P1: Power consumption
N: R.P.M
Cos φ: Power factor
η: Efficiency
C: Capacitor
Ø: Cable section
LC: Cable length

* Available on request Voltage up to 1000 V
** Available on request STAR/DELTA version

DAB PUMPS reserves the right to make modifications without notice

TR14

SUBMERSIBLE MOTOR 14"

TECHNICAL DATA - *THREE PHASE MOTORS - 4 POLES* S/D**

MODEL	STANDARD	AISI 316	V* [V]	P2		SF	In (SF) [A]	Is/In	P1 [W]	N [min-1]	Cos φ	η %	CABLE		
	CODE	CODE		[hp]	[kW]								Dia AWG	Lenght ft	Lenght m
TR14230 - 170KW	60161167	TBD	460	230	170	1.15	352	5.5	228000	1750	0.81	86	6x00+1x0	26	8
	TBD	TBD	575			1.15	276	4.0	219901	1755	0.8	89	6x00+1x0	26	8
TR14260 - 190KW	60161168	TBD	460	260	190	1.15	384	6.0	252000	1750	0.82	87	6x00+1x0	26	8
	TBD	TBD	575			1.15	306	4.2	246528	1755	0.81	89	6x00+1x0	26	8
TR14300 - 220KW	60161169	TBD	460	300	220	1.15	440	6.0	291000	1750	0.83	87	6x00+1x0	26	8
	TBD	TBD	575			1.15	350	4.1	285505	1755	0.82	89	6x00+1x0	26	8
TR14350 - 260KW	60161170	TBD	460	350	260	1.15	514	6.0	340000	1750	0.83	88	6x00+1x0	26	8
	TBD	TBD	575			1.15	408	4.0	333198	1755	0.82	90	6x00+1x0	26	8
TR14400 - 300KW	60161171	TBD	460	400	300	1.15	607	6.5	393000	1750	0.81	88	6x00+1x0	26	8
	TBD	TBD	575			1.15	466	3.8	385206	1750	0.83	89	6x00+1x0	26	8

V: Rated voltage
P2: Rated output
SF: Service factor
In: Rated current
In (SF): Service factor current

Is/In: Locked rotor current/Rated current
Cs/Cn: Locked rotor Torque/Rated Torque
P1: Power consumption
N: R.P.M
Cos φ: Power factor

η: Efficiency
C: Capacitor
Ø: Cable section
LC: Cable length

* Available on request Voltage up to 1000 V
** Available on request STAR/DELTA version

TR14

SUBMERSIBLE MOTOR 14"

DIMENSIONS AND WEIGHTS - *THREE PHASE MOTORS - 2 POLES*

MODEL	L LENGTH inch	L LENGTH mm	WEIGHT lbs	WEIGHT kg	AXIAL THRUST lbf	AXIAL THRUST N
TR14300 - 220KW	69	1760	1462	663	16000	70000
TR14340 - 250KW	75	1910	1728	784	16000	70000
TR14400 - 300KW	80	2020	1863	845	16000	70000
TR14450 - 330KW	85	2160	1997	906	16000	70000
TR14500 - 370KW	91	2320	2227	1010	16000	70000
TR14550 - 400KW	97	2460	2436	1105	16000	70000

DIMENSIONS AND WEIGHTS - *THREE PHASE MOTORS - 4 POLES*

MODEL	L LENGTH inch	L LENGTH mm	WEIGHT lbs	WEIGHT kg	AXIAL THRUST lbf	AXIAL THRUST N
TR14230 - 170KW	75	1910	1135	776	16000	70000
TR14260 - 190KW	80	2020	1246	855	16000	70000
TR14300 - 220KW	85	2160	1334	950	16000	70000
TR14350 - 260KW	91	2320	1543	1065	16000	70000
TR14400 - 300KW	97	2460	1653	1108	16000	70000

POS.	inch	mm	POS.	inch	mm	POS.	inch	mm
A	11.417	Ø 290	**G**	0.276	7	**N**	4.921	125
B	7.874	Ø 200	**H**	0.866	22	**O**	5/8 "	16
C	2.165	Ø 55	**I**	5 "	127	**P**	2.323	59
D	3.799	96.5	**J**	13.307	338	**Q**	0.394	10
E	3.937	100	**K**	3.228	82			
F	0.157	4	**M**	10.039	255			

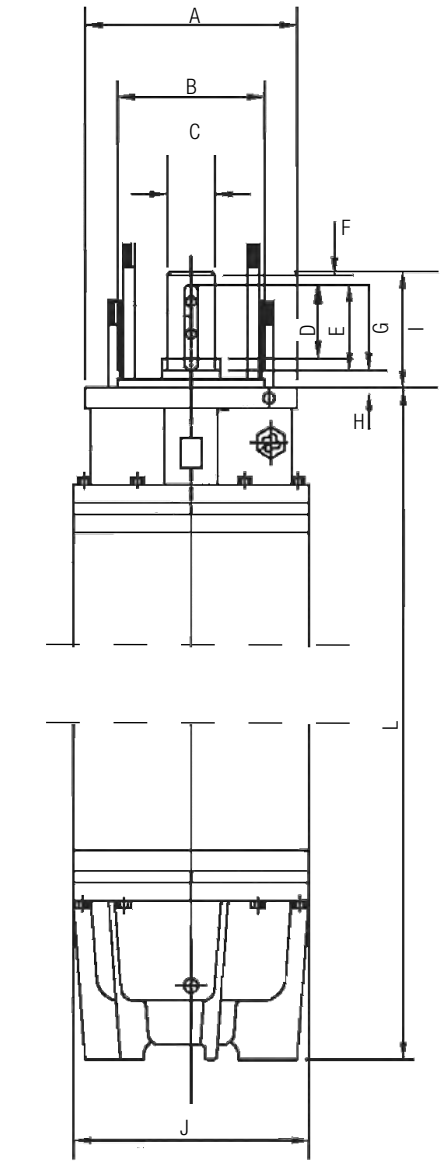

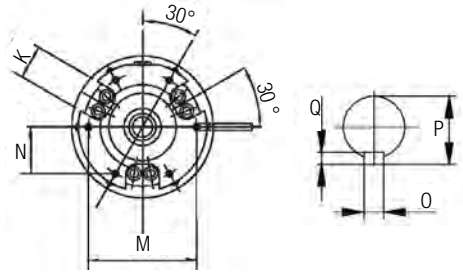

ON REQUEST

- CABLES WITH DIFFERENT LENGTH
- DIFFERENT SUPPLY VOLTAGES
- PT100 TEMPERATURE SENSOR
- PTC TEMPERATURE SENSOR
- SPECIAL TERMINAL SHAFT

DAB PUMPS reserves the right to make modifications without notice

DIVER 6

SUBMERSIBLE MULTI-IMPELLER PUMPS



C US

6" multi-impeller submersible pump for clean water, designed for pressurization, rainwater re-use, gardening and irrigation in residential building service.
The pump is ideal for use in rainwater recovery systems and to increase the water pressure.
Available as manual or automatic model. The automatic version is a single-phase pump with a float switch for protection against dry running with the need for a control panel. The pump has an in built starting capacitor and the motor has integrated overheating protection.
Equipped with stainless steel debris filter, a non-return valve and a 49 ft (15 m) power cable with power plug.
Renewed to further increase reliability and the ergonomics (the handle has been completely redesigned).
The pumps is supplied as standard with a four-section step fitting and a 1" M/F check valve.

Flow rate maximum from 4.4 to 23.8 GPM(1 m^3/h to 5,4 m^3/h)

Head up to 151 ft (46 m)

Maximum immersion depth 39 ft (12 m)

Type of pumped liquid clean, free from solid or abrasive substances, non-viscous, non-aggressive, non-crystallized and chemically neutral

Minimum and maximum ambient temperature 32°F / +95°F (0°C / +35°C)

Maximum number of starts 20/h

Impeller/s material technopolymer

Power cable with plug 49 ft (15 m)

Possible type of installation
fixed or portable in vertical position

Special versions on request
cables of different lengths, different plug

TECHNICAL DATA

MODEL	CODE	ELECTRICAL DATA						
		VOLTAGE 60 Hz	P1 MAX kW	P2 NOMINAL		In A	CAPACITOR	
				kW	HP		µF	Vc
DIVER 6 600 M-A	60193029.	115V/60Hz	0.95	0.65	0.88	8.7	30	250
DIVER 6 700 M-A	60193030.	115V/60Hz	0.77	0.55	0.75	7.8	30	250
DIVER 6 800 M-A	60193031.	115V/60Hz	0.95	0.65	0.9	8.7	30	250

RANGE PERFORMANCE

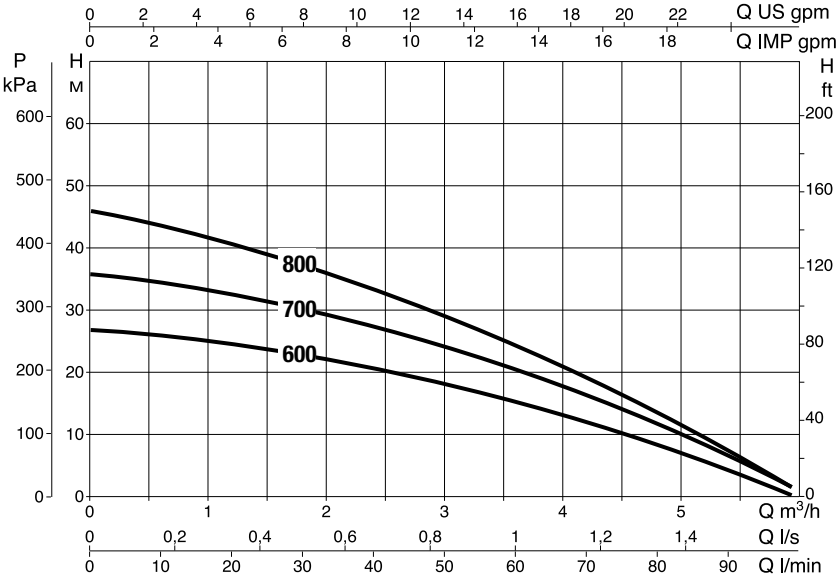

DIVER 6

SUBMERSIBLE MULTI-IMPELLER PUMPS

DIMENSIONS AND WEIGHTS

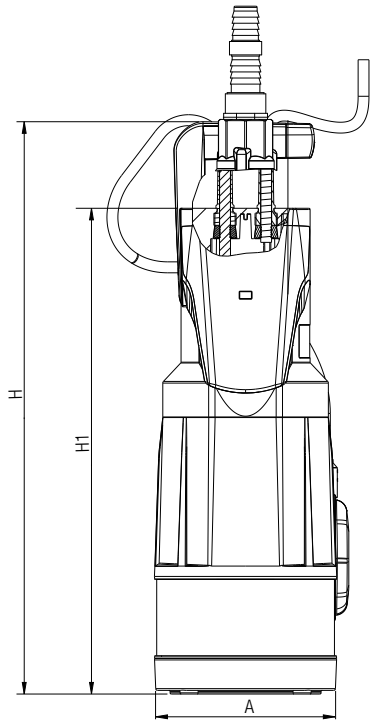

MODEL	Units	A	H	H1	Ø	PACKING DIMENSIONS			PACKING VOLUME	Q.TY X PALLET	WEIGHT
						L/A	L/B	H			
DIVER 6 - 600 M-A	inch	5.9	16.7	13.9	1"	9.1	7.5	19.7	0.7 ft³	40	17.7 lbs
	mm	150	423	354		230	190	500	0.02 m³		8.05 kg
DIVER 6 - 700 M-A	inch	5.9	18.5	15.7	1"	9.1	7.5	19.7	0.7 ft³	40	20.5 lbs
	mm	150	470	399		230	190	500	0.02 m³		9.30 kg
DIVER 6 - 800 M-A	inch	5.9	18.5	15.7	1"	9.1	7.5	19.7	0.7 ft³	40	20.8 lbs
	mm	150	470	399		230	190	500	0.02 m³		9.45 kg

DAB PUMPS reserves the right to make modifications without notice

DTRON 2

7" ELECTRONIC MULTISTAGE SUBMERSIBLE PUMPS



7" submersible electronic multi-impeller pump designed for use in water wells, tanks or cisterns. The pump is suitable for use in residential building service for pressurization, rainwater reuse and gardening and irrigation.
The pressure switch and flow switch integrated with the electronic board, make the pump completely automatic for the switching on/off and dry running protection. It integrates a double mechanical seal, a non return valve and a handle for ease transport and installation. Built with a innovative modular design: the hydraulic part, the motor, the electrical part and the filter can be disassembled separately, simplifying the maintenance activity.
The suction height is adjustable from the bottom up to 3.1" (80 mm) using the special accessory supplied as standard. It is possible to connect a float without compromising the watertight seal of the pump thanks to the NFC (Near Field Communication) pocket. The integrated expansion tank protect from water hammer, an additional expansion tank is not required. The cable has a quick coupling for easier installation inside the tank/cistern.
The pump is also available in X version with 1" intake and kit X to connect to a suction hose and float to prevent the suction of impurities from the bottom. The whole pump is IP 68 certified, with the accessory DOC68 (supplied separately) becomes a surface pump to be used with flooded suction.

Maximum immersion depth 39 ft (12 m)
Type of pumped liquid clean, free from solid or abrasive substances, non-viscous, non-aggressive, non-crystallized and chemically neutral.
Free passage 0.1 in (2 mm)
Liquid temperature range from 32°F to +122°F (+0°C to +50°C)
Maximum immersion depth 49 ft (15 m)
Set cut-in 35 psi (2,4 bar (+-0,2))
Outlet connection thread 1" 1/4
Pump maximum diameter 7.3 in (185 mm)
Protection class IP 68
Motor insulation class F
Power cable with plug 49 ft (15 m)
Possible type of installation fixed, horizontal or vertical. Submerged or semi-submerged. It can be installed on the surface, under the water level, or outside in a vertical position with the DOC68 accessory (supplied separately).

DTRON 2

C US

ACCESSORIES PAG. 117

TECHNICAL DATA

MODEL	CODE	VOLTAGE 60 Hz	P2 NOMINAL		P1 MAX W	In A
			kW	HP		
DTRON 2 45/90	60195643	115/60	0.67	0.9	1050	9.7
DTRON 2 35/120	60197690	115/60	0.67	0.9	950	8.8

X VERSION

MODEL	CODE
DTRON2 X 45/90	60202763
DTRON2 X 35/120	60202764



*DTron X with the floating suction kit

DTRON 2

7" ELECTRONIC MULTISTAGE SUBMERSIBLE PUMPS

RANGE PERFORMANCE

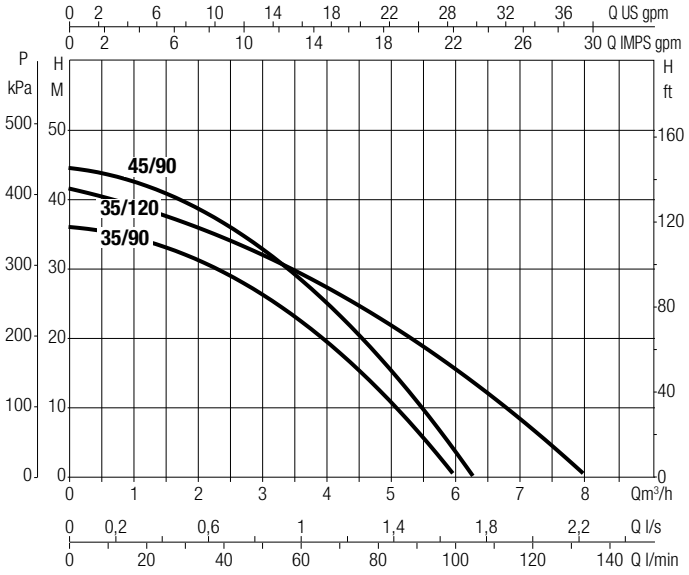

DTRON 2

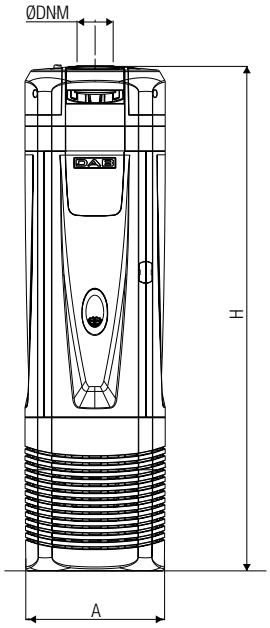

DTRON 2 X

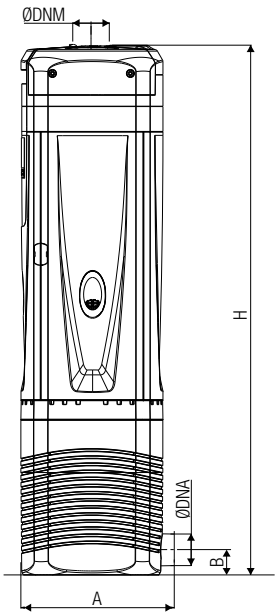

DIMENSIONS AND WEIGHTS

MODEL	units	A	B	H	Ø DNM	Ø DNA	PACKING DIMENSIONS			PACKING VOLUME ft³	Q.TY X PALLET	WEIGHT
							L/A	L/B	H			
DTRON2 45/90	inch	7.3	-	24.1	1" 1/4	-	29.1	9.1	11.8	1.8 ft³	15	25.1 lbs
	mm	185	-	611		-	740	230	300	0.05106 m³		11.4 Kg
DTRON2 35/120	inch	7.3	-	25	1" 1/4	-	29.1	9.1	11.8	1.8 ft³	15	25.1 lbs
	mm	185	-	636		-	740	230	300	0.05106 m³		11.4 Kg
DTRON2 X 45/90	inch	7.7	1.3	25	1" 1/4	1"	29.1	9.1	11.8	1.8 ft³	15	25.4 lbs
	mm	195	32	636			740	230	300	0.05106 m³		11.5 Kg
DTRON2 X 35/120	inch	7.7	1.3	24.1	1" 1/4	1"	29.1	9.1	11.8	1.8 ft³	15	25.4 lbs
	mm	195	32	611			740	230	300	0.05106 m³		11.5 Kg

DAB PUMPS reserves the right to make modifications without notice

DTRON 3

7" ELECTRONIC MULTISTAGE SUBMERSIBLE PUMPS



7" electronic submersible multi-impeller pump for clean water designed for use in wells, cisterns or tanks. It can be use submerged, partially submerged or on the surface (with the DOC68 accessory).
It is suitable for use in residential building service for pressurization, reuse of rainwater and gardening and irrigation activities. The pressure sensor and a flow meter integrated with the electronic board, make the pump completely automatic for the switching on/off and dry running protection. It integrates a double mechanical seal, a non return valve and a handle for ease transport and installation. Suction height can be adjusted from the bottom up to 3.1" (80 mm) using the special accessory supplied as standard. It is possible to connect a float without compromising the watertight seal of the pump thanks to the NFC (Near Field Communication) pocket. The starting pressure is adjustable through the Com Box, supplied as standard. Expansion tank included, use of an additional expansion tank is superfluous. 49 ft (15 m) power cable with plug. The Com Box allows you to set the start and stop pressure and to control the alarms. The pump is also available in X version with 1" intake and kit X to connect to a suction hose and float to prevent the suction of impurities from the bottom. The whole pump is IP 68 certified, with the accessory DOC68 (supplied separately) becomes a surface pump to be used with flooded suction. If the pump is combined with an identical DTron 3 the two pumps can operate in twin or alternate mode.

Maximum immersion depth 39 ft (12 m)

Type of pumped liquid clean, free from solid or abrasive substances, non-viscous, non-aggressive, non-crystalized and chemically neutral

Free passage 0.1 in (2 mm)

Liquid temperature range from 32°F to +122°F (0°C to +50°C)

Maximum immersion depth 49 ft (15 m)

Set cut-in 35 psi (2.4 bar (+-0.2)

Outlet connection Thread 1" 1/4

Pump maximum diameter 7.3 in (185 mm)

Protection class IP 68

Motor insulation class F

Power cable with plug 39 ft (15 m)

Possible type of installation fixed, horizontal or vertical. Submerged or semi-submerged. It can be installed on the surface, under the water level, or outside in a vertical position with the DOC68 accessory (supplied separately).

DTron 3

C US

ACCESSORIES PAG. 117

TECHNICAL DATA

MODEL	CODE
DTRON 3 45/90	60195642
DTRON 3 35/120	60197703

VOLTAGE 60 Hz	P2 NOMINAL		P1 MAX W	In A
	kW	HP		
115/60	0.67	0.9	1050	9.7
115/60	0.67	0.9	950	8.8

X VERSION

MODEL	CODE
DTRON3 X 45/90	60202766
DTRON3 X 35/120	60202767



*DTron X with the floating suction kit

DTRON 3

7" ELECTRONIC MULTISTAGE SUBMERSIBLE PUMPS

RANGE PERFORMANCE

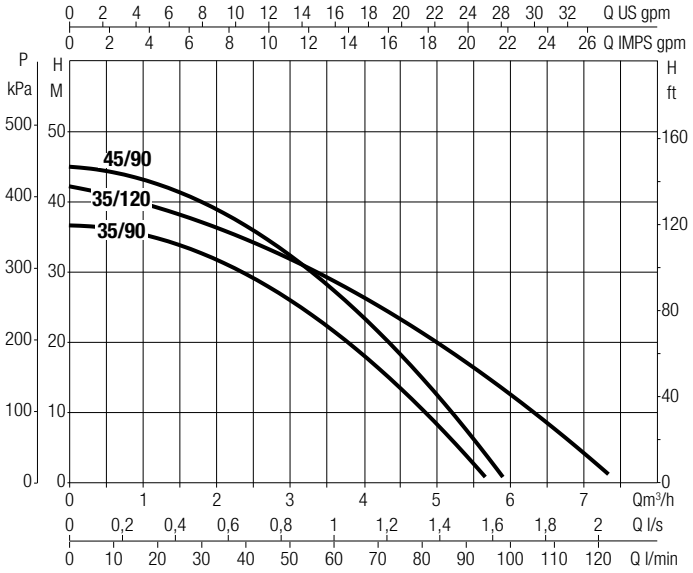

DTRON 3

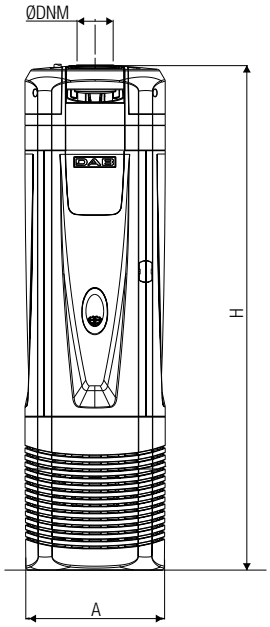

DTRON 3 X

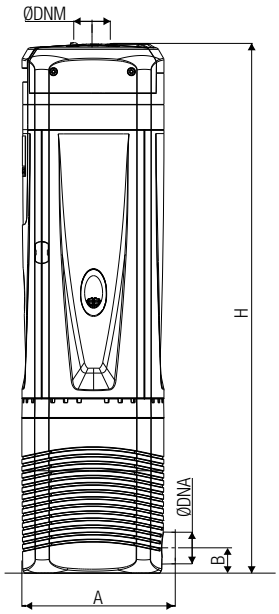

DIMENSIONS AND WEIGHTS

MODEL	units	A	B	H	Ø DNM	Ø DNA	PACKING DIMENSIONS			PACKING VOLUME	Q.TY X PALLET	WEIGHT
							L/A	L/B	H			
DTRON3 45/90	inch	7.3	-	25.6	1" 1/4	-	30.7	9.1	11.8	1.9 ft³	15	25.6 lbs
	mm	185	-	651			780	230	300	0.05382 m³		11.6 Kg
DTRON3 35/120	inch	7.3	-	25.6	1" 1/4	-	30.7	9.1	11.8	1.9 ft³	15	25.6 lbs
	mm	185	-	651			780	230	300	0.05382 m³		11.6 Kg
DTRON3 X 45/90	inch	7.7	1.3	26.6	1" 1/4	1"	30.7	9.1	11.8	1.9 ft³	15	25.8 lbs
	mm	195	32	676			780	230	300	0.05382 m³		11.7 Kg
DTRON3 X 35/120	inch	7.7	1.3	26.6	1" 1/4	1"	30.7	9.1	11.8	1.9 ft³	15	25.8 lbs
	mm	195	32	676			780	230	300	0.05382 m³		11.7 Kg

DAB PUMPS reserves the right to make modifications without notice

ACCESSORIES

SUBMERSIBLE PUMPS AND MOTORS

DTRON ACCESSORIES	DESCRIPTION	CODE
	**DCONNECT BOX 2** Thanks to DConnect Box 2 and the new App you can check the pump, set the starting and stopping parameters, view the details of alarms and monitor the status of the system directly on your smartphone. (Only for DTron 3 and Esybox Line products, included with Esybox Diver).	60198035 NEMA 5 PLUG to 120v NEMA 5/15P 60198037 NEMA 6 PLUG to 230v NEMA 6/15P
	**NFC WATER LEVEL MEASUREMENT** Only connected to the DConnect Box 2, controls the level of water in the tank and notifies the user of the level via an App. (Only for DTron 3 and Esybox diver).	60184570
	**NFC FLOAT** Detects the level of water in a tank, preventing emptying of the latter and seizing of the pump avoiding the dry running, due to too low a level of water.	60184577
	**DOC68** The DOC68 permits installation of the DTron and Esybox Diver even outdoors as an IP68 certified surface pump.	60192276

ACCESSORIES
SUBMERSIBLE PUMPS AND MOTORS

ACCESSORIES

SUBMERSIBLE PUMPS AND MOTORS

CONTROL BOX - *USA VERSION*

• Version with metal casing.
• PLUS version contains a magnetic line contactor carefully matched to the motor, eliminating the need for an external line contactor.

4GG / 4GX ACCESSORIES	DESCRIPTION	CODE	4GG	4GX
 C US 190906	**CONTROL BOX 4CBUS 1.5HP 230V 60HZ BASIC TESLA**	60174733	•	•
	CONTROL BOX 4CBUS 2HP 230V 60HZ BASIC TESLA	60174734	•	•
	CONTROL BOX 4CBUS 3HP 230V 60HZ BASIC TESLA	60174735	•	•
	CONTROL BOX 4CBUS 5HP 230V 60HZ BASIC TESLA	60174736	•	•
	CONTROL BOX 4CBUS 1.5HP 230V 60HZ PLUS TESLA	60174737	•	•
	CONTROL BOX 4CBUS 2HP 230V 60HZ PLUS TESLA	60174738	•	•
	CONTROL BOX 4CBUS 3HP 230V 60HZ PLUS TESLA	60174739	•	•
	CONTROL BOX 4CBUS 5HP 230V 60HZ PLUS TESLA	60174740	•	•

TECHNICAL DATA - *FOR MOTORS 4GG - 4GX*

MODEL	CODE	P2 [hp]	P2 [kW]	V [V]	C1 [µF]	C1 [V]	C2 [µF]	C2 [V]
CONTROL BOX 4CBUS 1.5HP 230V	60174733	1.5	1.1	230	10	370	105-126	250
CONTROL BOX 4CBUS 2HP 230V	60174734	2	1.5	230	20	370	105-126	250
CONTROL BOX 4CBUS 3HP 230V	60174735	3	2.2	230	45	370	208-250	250
CONTROL BOX 4CBUS 5HP 230V	60174736	5	3.0	230	2x40	370	270-324	250
CONTROL BOX 4CBUS 1.5HP 230V	60174737	1.5	1.1	230	10	370	105-126	250
CONTROL BOX 4CBUS 2HP 230V	60174738	2	1.5	230	20	370	105-126	250
CONTROL BOX 4CBUS 3HP 230V	60174739	3	2.2	230	45	370	208-250	250
CONTROL BOX 4CBUS 5HP 230V	60174740	5	3.0	230	2x40	370	270-324	250

DIMENSIONS AND WEIGHTS

MODEL	A x B x C [inch]	A x B x C mm	WEIGHT lbs	WEIGHT kg
CONTROL BOX 4CBUS 1.5HP 230V	8.3" x 9.8"x 5.9"	211 x 249 x 150	5.6	2.5
CONTROL BOX 4CBUS 2HP 230V	8.3" x 9.8"x 5.9"	211 x 249 x 150	5.8	2.6
CONTROL BOX 4CBUS 3HP 230V	8.3" x 9.8"x 5.9"	211 x 249 x 150	5.8	2.6
CONTROL BOX 4CBUS 5HP 230V	8.3" x 9.8"x 5.9"	211 x 249 x 150	5.8	2.6
CONTROL BOX 4CBUS 1.5HP 230V	8.3" x 9.8"x 5.9"	211 x 249 x 150	5.8	2.6
CONTROL BOX 4CBUS 2HP 230V	8.3" x 9.8"x 5.9"	211 x 249 x 150	5.9	2.7
CONTROL BOX 4CBUS 3HP 230V	8.3" x 9.8"x 5.9"	211 x 249 x 150	6.0	2.7
CONTROL BOX 4CBUS 5HP 230V	8.3" x 9.8"x 5.9"	211 x 249 x 150	6.0	2.7

POS.	INCH	mm	POS.	INCH
A	8.3"	211	**G**	1" Conduit
B	9.8"	249	**H**	1/2" Conduit
C	5.9"	150		

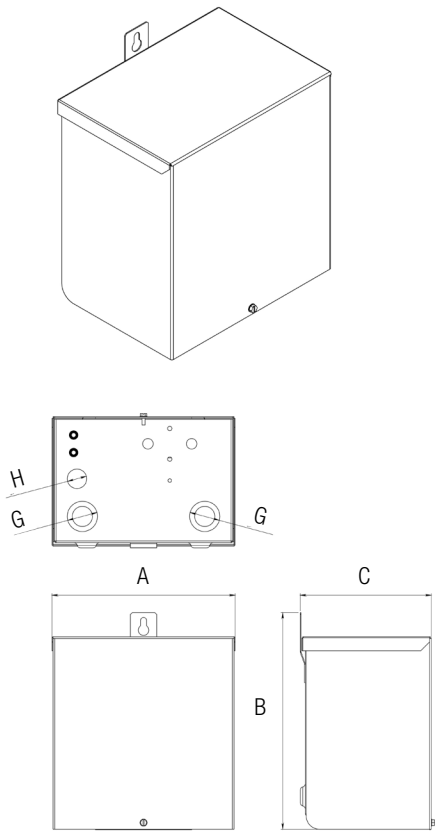

ACCESSORIES

SUBMERSIBLE PUMPS AND MOTORS

CONTROL BOX - *USA VERSION*

- Version with metal casing.
- Version with auxiliary contacts for control by probes, pressure switch and or float switch.

4GG / 4GX ACCESSORIES	DESCRIPTION	CODE	4GG	4GX
 C US 190906	**CONTROL BOX 4CBUS 0.5HP 115V 60HZ BASIC TESLA**	60174729	•	•
	CONTROL BOX 4CBUS 0.5HP 230V 60HZ BASIC TESLA	60174730	•	•
	CONTROL BOX 4CBUS 0.75HP 230V 60HZ BASIC TESLA	60174731	•	•
	CONTROL BOX 4CBUS 1HP 230V 60HZ BASIC TESLA	60184859	•	•

TECHNICAL DATA - *FOR MOTORS 4GG - 4GX*

MODEL	CODE	P2 [HP]	P2 [kW]	V [V]	C [µF]	C [V]
CONTROL BOX 4CBUS 0.5HP 115V	60174729	0.5	0.37	115	250-300	125
CONTROL BOX 4CBUS 0.5HP 230V	60174730	0.5	0.37	230	59-71	250
CONTROL BOX 4CBUS 0.75HP 230V	60174731	0.75	0.55	230	86-103	250
CONTROL BOX 4CBUS 1HP 230V	60184859	1	0.75	230	105-126	250

DIMENSIONS AND WEIGHTS

MODEL	A x B x C [inch]	A x B x C mm	WEIGHT lbs	WEIGHT kg
CONTROL BOX 4CBUS 0.5HP 115V	4.9" x 8.2" x 2.9"	124 x 208 x 74	2.8	1.3
CONTROL BOX 4CBUS 0.5HP 230V	4.9" x 8.2" x 2.9"	124 x 208 x 74	2.4	1.1
CONTROL BOX 4CBUS 0.75HP 230V	4.9" x 8.2" x 2.9"	124 x 208 x 74	2.4	1.1
CONTROL BOX 4CBUS 1HP 230V	4.9" x 8.2" x 2.9"	124 x 208 x 74	2.6	1.2

POS.	INCH	mm	POS.	INCH
A	4.9"	124	**G**	1/2" conduit
B	8.2"	208	**H**	3/4" conduit
C	2.9"	74		

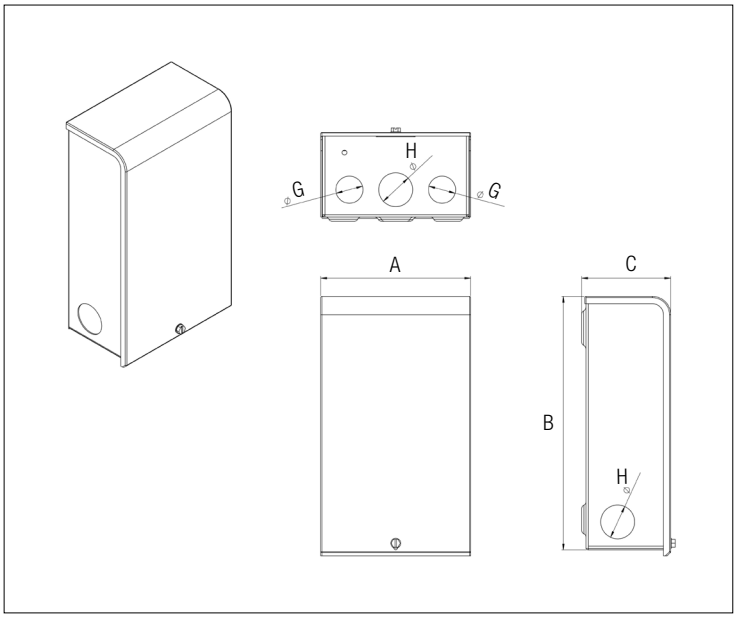

ACCESSORIES

SUBMERSIBLE PUMPS AND MOTORS

CONTROL BOX - *USA VERSION*

- Version with metal casing.
- Version with auxiliary contacts for control by probes, pressure switch and or float switch.

6GF / 6GX ACCESSORIES	DESCRIPTION	CODE	6GF	6GX
 C US 190906	**CONTROL BOX 6CBUS 7.5HP 230V 60HZ PLUS TESLA**	60184860	•	•
	CONTROL BOX 6CBUS 10HP 230V 60HZ PLUS TESLA	60184861	•	•
	CONTROL BOX 6CBUS 15HP 230V 60HZ PLUS TESLA	60184862	•	•

TECHNICAL DATA - *FOR MOTORS 6GF - 6GX*

MODEL	CODE
CONTROL BOX 6CBUS 7.5HP 230V	60184860
CONTROL BOX 6CBUS 10HP 230V	60184861
CONTROL BOX 6CBUS 15HP 230V	60184862

P2		V [V]	RUN CAP		START CAPS.	
[hp]	[kW]		[µF]	[V]	[µF]	[V]
7.5	5.5	230	45	370	270-324	330
					216-260	330
10	7.5	230	35	370	270-324	330
			35	370	216-260	330
					130-156	330
15	11	230	45	370	270-324	330
			45	370	270-324	330
			45	370	161-193	330

DIMENSIONS AND WEIGHTS

MODEL	A x B x C [inch]	A x B x C mm	WEIGHT lbs	WEIGHT kg
CONTROL BOX 6CBUS 7.5HP 230V	8.25 x 15.39 x 6.42	210 x 391 x 163	12.00	5.4
CONTROL BOX 6CBUS 10HP 230V	8.25 x 15.39 x 6.42	210 x 391 x 163	13.55	6.1
CONTROL BOX 6CBUS 15HP 230V	8.25 x 15.39 x 6.42	210 x 391 x 163	15.65	7.1

POS.	INCH	mm	POS.	INCH	mm
A	8.25	210	**F**	1/2	12.7
B	15.39	391	**G**	3/4	19.05
C	6.42	163	**H**	1	25.4
D	16.54	420	**I**	1	25.4
E	6.56	167	**L**	1-1/4	31.75

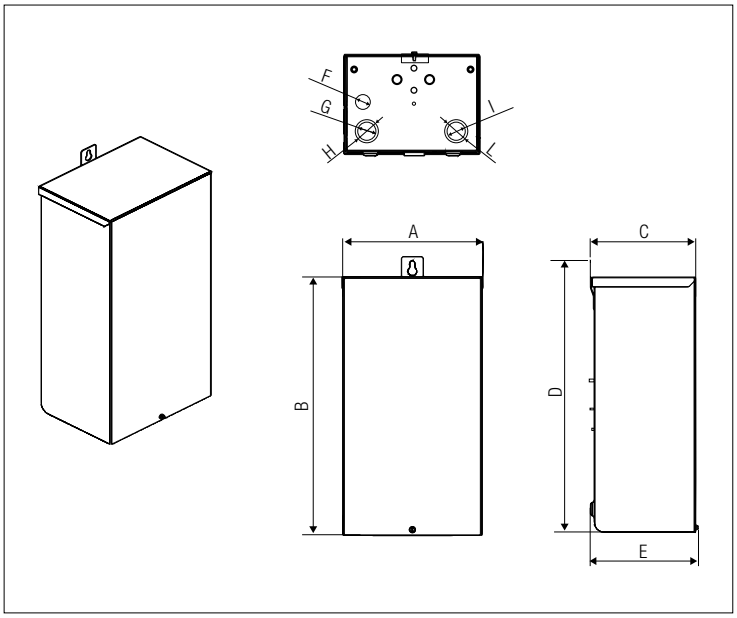

ACCESSORIES

SUBMERSIBLE PUMPS AND MOTORS

TR6 / TR8 / TR10 / TR12 / TR14 ACCESSORIES	DESCRIPTION	CODE	TR6 / TR8	TR10 / TR12 TR14 CAST IRON AND AISI 316	TR10 / TR12 TR14 AISI 904
	KIT, PT100 6"-8" STD/N/R - CABLE 492FT	60199224	•		
	KIT, PT100 6"-8" STD/N/R - CABLE 656FT	60199225	•		
	KIT, PT100 6"-8" STD/N/R - CABLE 820FT	60199226	•		
	KIT, PT100 6"-8" STD/N/R - CABLE 984FT	60199227	•		
	KIT, PT100 6"-8" STD/N/R - CABLE 1312FT	60199228	•		
	KIT, PT100 10"-12"-14" STD/N - CABLE 33FT	60199229		•	
	KIT, PT100 10"-12"-14" STD/N - CABLE 66FT	60199230		•	
	KIT, PT100 10"-12"-14" STD/N - CABLE 131FT	60199231		•	
	KIT, PT100 10"-12"-14" STD/N - CABLE 197FT	60199232		•	
	KIT, PT100 10"-12"-14" STD/N - CABLE 262FT	60199233		•	
	KIT, PT100 10"-12"-14" STD/N - CABLE 328FT	60199234		•	
	KIT, PT100 10"-12"-14" STD/N - CABLE 492FT	60199235		•	
	KIT, PT100 10"-12"-14" STD/N - CABLE 656FT	60199236		•	
	KIT, PT100 10"-12"-14" STD/N - CABLE 820FT	60199237		•	
	KIT, PT100 10"-12"-14" STD/N - CABLE 1312FT	60199238		•	
	KIT, PT100 10"-12"-14" R - CABLE 26FT	60199239			•
	KIT, PT100 10"-12"-14" R - CABLE 98FT	60199240			•

INDEX - SUMP & SEWAGE



NOVA 40th
SUBMERSIBLE PUMPS FOR DRAINAGE
PAGE 124



NOVA UP
SUBMERSIBLE PUMPS
PAGE 126



VERTY NOVA
INTEGRATED FLOAT SWITHC SUBMERSIBLE PUMPS
PAGE 127



FEKA 40TH
SUBMERSIBLE PUMPS FOR EFFLUENT
PAGE 128



CLEAR ANSWER
PUMPS FOR POUND FOUNTAINS & WATER FALLS
PAGE 130



SOLID ANSWER
PUMPS FOR POUND FOUNTAINS & WATER FALLS
PAGE 131



FEKA BVP
SEWAGE PUMPS
PAGE 132



DRENAG 1000 - 1200
SUBMERSIBLE PUMPS
PAGE 133



FEKA VS
SEWAGE PUMPS
PAGE 135



DRENAG FX
SUBMERSIBLE PUMPS FOR DRAINAGE OF SANDY WATER AND WATER FROM CONSTRUCTION SITE
PAGE 137



GRINDER FX
SUBMERSIBLE PUMPS WITH CUTTING SYSTEM FOR SEWAGE
PAGE 139



FEKA FXC
SUBMERSIBLE PUMPS FOR EFFLUENT
PAGE 141



FEKA FXV
SUBMERSIBLE PUMPS FOR SEWAGE
PAGE 144

ACCESSORIES
PAGE 149

NOVA 40th

SUBMERSIBLE PUMPS FOR DRAINAGE



nova M-A



nova M-NA

Submersible pump for drainage also rainwater in residential building service. The Nova series has been redesigned to mark forty years of commercialization, making it even more reliable, resistant and ergonomic. It can also be used for emptying tanks or cisterns.
It is suitable for fixed or portable installations and it is available in the automatic version with the integrated float switch or in the manual version without the float. The pump is suitable for draining flooded basements, cellars and garages or to prevent flooding when installed in rainwater collection wells, and can be used as a portable pump in emergency situations to drain water from flooded premises. A 90° fitting is provided for vertical delivery. The pump body, the impeller and the suction grid are in technopolymer, the motor shaft in stainless steel. Thermal protection incorporated in all single-phase versions. It can work in dry run for up to 1 minute. 0.4 in free passage. In compliance with CSA Standards C22.2 No.108 - 14, UL Standard No. 778.

Flow rate minimum and maximum
from 4.4 to 70.4 GPM (1 m³/h to 16 m³/h)

Head up to 33 ft (10.2 m)

Type of pumped liquid
drainage water, mostrly celan, rainwater

Free passage
0.2" or 0.4" (5 or 10 mm) depending on the model

Supported liquid temperature (maximum and minimum)
from 32°F to +95°F (0°C to +35°C) for domestic use
from 32°F to +122°F (0°C to +50°C) other use

Outlet connection threated 1" 1/4

Impeller material technopolymer

Class of protection IP 68

Motor insulation class F

Dry run time 1 minute

Possible type of installation
fixed or portable in vertical position

1979-2019 NOVA FEKA 40 YEARS ANNIVERSARY Celebration

C SA US

ACCESSORIES PAG. 149

TECHNICAL DATA

MODEL	CODE	ELECTRICAL DATA						
		VOLTAGE 60 Hz	P1 MAX kW	P2 NOMINAL		In A	CAPACITOR	
				kW	HP		µF	Vc
NOVA 180 MA	60198429H	115-120	0.3	0.1	0.2	2.9	12.5	250
NOVA 180 MNA	60200868H	115-120	0.3	0.1	0.2	2.9	12.5	250
NOVA 200 MNA	60200869H	115-120	0.4	0.2	0.3	3.8	20	250
NOVA 300 MA	60198428H	115-120	0.4	0.2	0.3	3.9	20	250
NOVA 600 MA	60198425H	115-120	0.7	0.5	0.6	6.4	20	250
NOVA 600 MNA	60200870H	115-120	0.7	0.5	0.6	6.4	20	250

RANGE PERFORMANCE

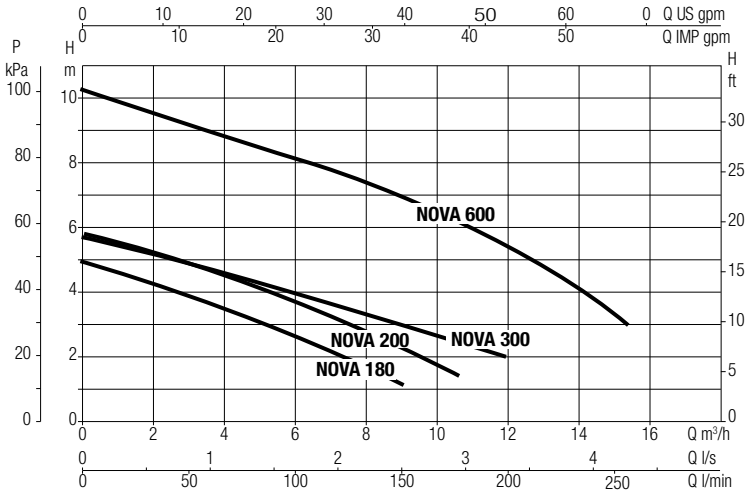

NOVA 40th

SUBMERSIBLE PUMPS FOR DRAINAGE

DIMENSIONS AND WEIGHT

NOVA 180/200

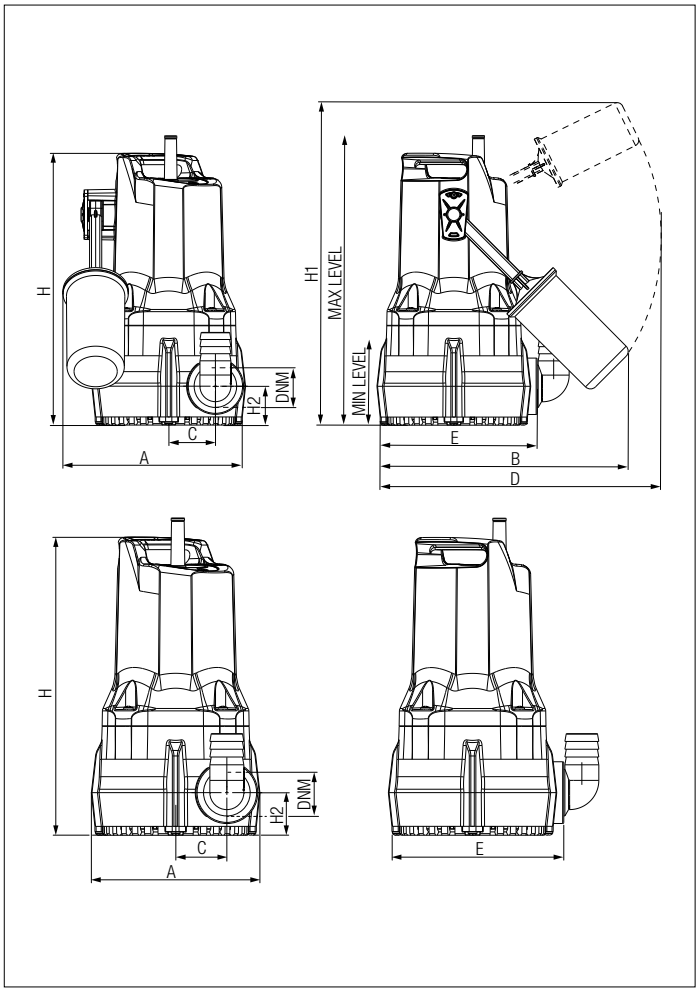

NOVA 300/600

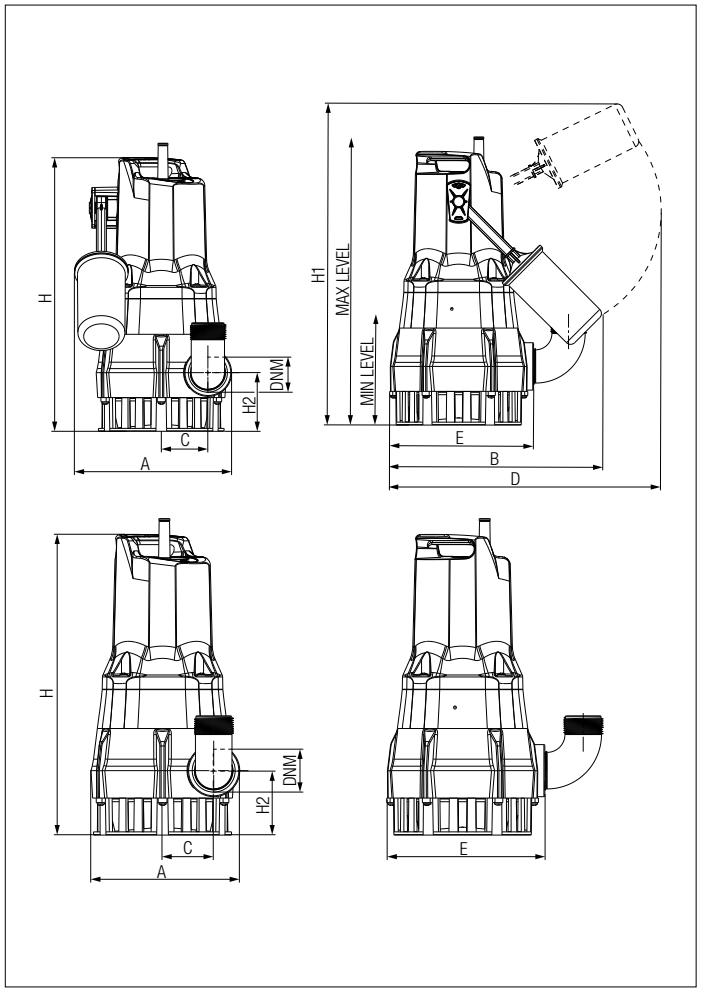

MODEL	units	A	B	C	D	E	H	H1	H2	LEV. MIN	DNM NPT	PACKING DIMENSIONS			CABLE LENGHT	VOLUME	WEIGHT
												L/A	L/B	H			
NOVA 180 MA	inch	7.1	9.7	1.8	11.7	6.2	10.6	13.6	1.5	3	1"1/4	11.3	8	12.6	16 ft	0.7 ft³	10.1 lbs
	mm	180	247	46	296	158	268	345	38	77		287	202	320	5 m	0.019 m³	4.6 Kg
NOVA 180 MNA	inch	5.9	-	1.8	-	6.2	10.6	-	1.5	-	1"1/4	11.3	8	12.6	16 ft	0.7 ft³	10.1 lbs
	mm	151	-	46	-	158	268	-	38	-		287	202	320	5 m	0.019 m³	4.6 Kg
NOVA 200 MNA	inch	5.9	-	1.8	-	6.2	10.6	-	1.5	-	1"1/4	11.3	8	12.6	16 ft	0.7 ft³	10.1 lbs
	mm	151	-	46	-	158	268	-	38	-		287	202	320	5 m	0.019 m³	4.6 Kg
NOVA 300 MA	inch	7.1	9.7	1.8	11.7	6.2	10.9	13.9	1.9	3.3	1"1/4	11.3	8	12.6	16 ft	0.7 ft³	10.1 lbs
	mm	180	247	46	296	158	277	354	47	85		287	202	320	5 m	0.019 m³	4.6 Kg
NOVA 600 MA	inch	7.4	10	2.2	11.7	6.9	13	17.4	2.8	7.5	1"1/4	11.3	8	17	16 ft	0.9 ft³	15.4 lbs
	mm	189	255	56	296	174	329	443	71	190		287	202	431	5 m	0.025 m³	7 Kg
NOVA 600 MNA	inch	6.4	-	2.2	-	6.9	13	-	2.8	-	1"1/4	11.3	8	17	16 ft	0.9 ft³	15.4 lbs
	mm	163	-	56	-	174	329	-	72	-		287	202	431	5 m	0.025 m³	7 Kg

DAB PUMPS reserves the right to make modifications without notice

NOVA UP

SUBMERSIBLE PUMPS



nova up M-A



nova up M-NA

C US

Vertical flow drainage pump in an automatic or manual version with removable filter for suction down to 0.1inch, features that make it a strong pump and allow for installation versatility.
These pumps can be used with liquids that contain solids of a maximum size up to 0.4 in.
Pump body, impeller, Cap and grille in technopolymer.
The motor, rotor shaft and screws in stainless steel.
Triple O-ring seal with interposed oil Chamber.
Asynchronous submersible motor for continuous operation. Stator in a sealed stainless steel enclosure.
Rotor mounted on ball bearings greased for life and oversized. Thermal protection incorporated and CAPACITOR permanently connected.
In compliance with CSA Standards C22.2 No.108 - 14, UL Standard No. 778.

Operating range
from 4.4 to 66 gpm (1 to 15 m^3/h) with TDH up to 33 ft (10m)

Temperature range of the liquid
from 32°F to +95°F (0°C to +35°C) for domestic use

Pumped liquid temperature
grey waters without fibers

Minimum depth
NOVA UP 300M-A 4.7" (120 mm)
NOVA UP 300M-NA 2.4" (60 mm)
NOVA UP 600M-A 6.5" (165 mm)
NOVA UP 600M-NA 2.8" (70 mm)

Maximum immersion depth 23 ft (7 m)

Installation vertical, fixed or portable

Degree of protection IP 68

Insulation class F

TECHNICAL DATA

MODEL	CODE	ELECTRICAL DATA						
		VOLTAGE 60 Hz	P1 MAX kW	P2 NOMINAL		In A	CAPACITOR	
				kW	HP		µF	Vc
NOVA UP 300 MA	60164179.	115	0.38	0.17	0.23	2.8	12.5	250
NOVA UP 600 MA	60164180.	115	0.78	0.45	0.61	5.6	20	250
NOVA UP 300 MNA	60164181.	115	0.38	0.17	0.23	2.8	12.5	250
NOVA UP 600 MNA	60164182.	115	0.78	0.45	0.61	5.6	20	250

RANGE PERFORMANCE

MODEL	Q=GPM	0	4.4	8.8	13.2	19.8	22	26.4	30.8	33	39.6	44	52.8	59.4
	Q=l/min	0	16,6	33,3	50	75	83,3	100	116,6	125	150	166,6	200	225
NOVA UP 300 MA	H - (ft)	25	23	21	18	15	14	12	9	8	3			
	H - (m)	7.6	6.9	6.25	5.6	4.7	4.4	3.6	2.8	2.3	1			
NOVA UP 600 MA	H - (ft)	32	31	30	28	25	24	22	20	19	15	13	7	1
	H - (m)	9.8	9.4	9	8.5	7.7	7.4	6.8	6.2	5.9	4.7	3.9	2	0.3
NOVA UP 300 MNA	H - (ft)	25	23	21	18	15	14	12	9	8	3			
	H - (m)	7.6	6.9	6.25	5.6	4.7	4.4	3.6	2.8	2.3	1			
NOVA UP 600 MNA	H - (ft)	32	31	30	28	25	24	22	20	19	15	13	7	1
	H - (m)	9.8	9.4	9	8.5	7.7	7.4	6.8	6.2	5.9	4.7	3.9	2	0.3

DIMENSIONS AND WEIGHT

MODEL	Unit	L1	L2	DNM NPT	PLUG	LENGTH OF THE CABLE	WEIGHT	Q.TY X PALLET
NOVA UP 300 MA	inch	11.6	3	1" ¼	US	26 ft	12.8 lbs	39
	mm	295.3	75.9			8 m	5.8 Kg	
NOVA UP 300 MNA	inch	11.6	3	1" ¼	US	26 ft	12.3 lbs	39
	mm	295.3	75.9			8 m	5.6 Kg	
NOVA UP 600 MA	inch	13.1	4.4	1" ¼	US	26 ft	16.1 lbs	26
	mm	332	111.6			8 m	7.3 Kg	
NOVA UP 600 MNA	inch	13.1	4.4	1" ¼	US	26 ft	15.7 lbs	26
	mm	332	111.6			8 m	7.1 Kg	

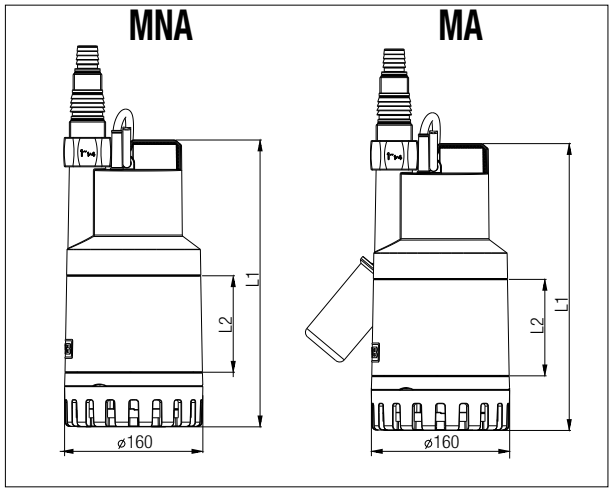

SUMP & SEWAGE

VERTY NOVA

INTEGRATED FLOAT SWITHC SUBMERSIBLE PUMPS



C US

Submersible pumps specifically designed for uses in narrow pits with dimensions down to 7.9 in x 7.9 in (20 cm x 20 cm). Suitable to pump clear water containing particles with maximum diameter up to 0.2" (5 mm)

Pump with built-in float switch

Anti-corrosive and rust-proof materials.
Integrated float switch.
Low suction capability: 0.1" (3mm) (manual mode).
Very low priming and STARTING level of the pump: 0.4 – 0.6" (10-15 mm) (manual mode).
Lever for manual or automatic operation.
Easy access through sliding cover to float switch for cleaning.
Motor with thermal overload protection.
Excellent cooling of the motor that enables the pump to operate even when it is partially submerged.
Supplied with power cable with plug, non return valve and 4-step fitting.
In compliance with CSA Standards C22.2 No.108 - 14, UL Standard No. 778

Operating range
from 4.4 to 52.8 gpm (1 to 12m³/h)
with head up to 30 ft (9 m)

Liquid temperature range
from 32°F to +95°F (0°C to +35°C) for domestic use

Pumped liquid grey water without fibres

Pump priming level 0.4" - 0.6" (10-15 mm) in manual operation

Max. immersion depth 23 ft (7 m)

TECHNICAL DATA

MODEL	CODE	ELECTRICAL DATA						
		VOLTAGE 60 Hz	P1 MAX kW	P2 NOMINAL		In A	CAPACITOR	
				kW	HP		µF	Vc
VERTY NOVA 206 M	60146276H	1x115 V~	0.33	0.18	0.25	2.7	12.5	250
VERTY NOVA 406 M	60146278H	1x115 V~	0.67	0.37	0.5	7	20	250

RANGE PERFORMANCE

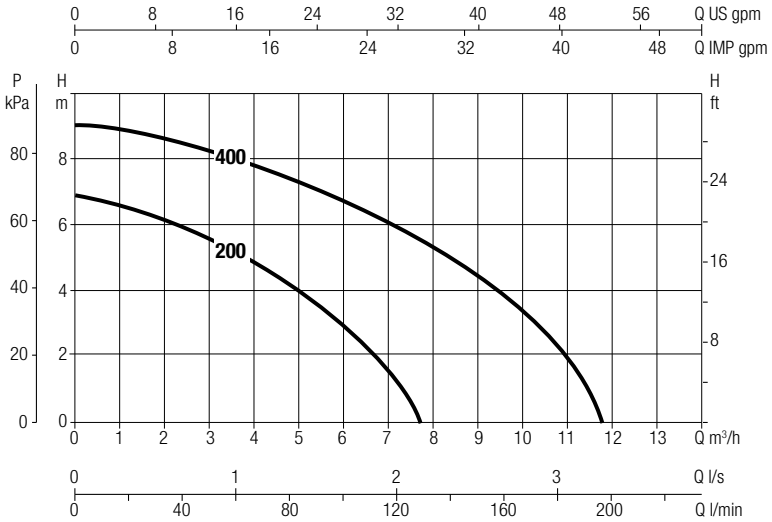

DIMENSIONS AND WEIGHT

MODEL	units	A	B	C	Ø D	H	H1	DNM (NPT)	CABLE ft	Q.TY x PALLET	WEIGHT lbs
VERTY NOVA 206 M	inch	6.2	8.9	7.9	1.3	15.7	10.4	1"1/4	16 ft	40	9.3 lbs
	mm	158	225	200	33	400	265		5 m		4.2 Kg
VERTY NOVA 406 M	inch	6.2	8.9	7.9	1.3	15.7	10.4	1"1/4	16 ft	40	11.2 lbs
	mm	158	225	200	33	400	265		5 m		5.1 Kg

DIMENSIONS

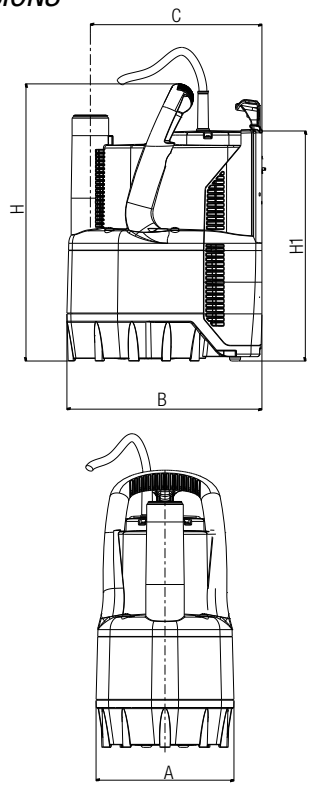

SUMP & SEWAGE

FEKA 40th

SUBMERSIBLE PUMPS FOR EFFLUENT



FEKA M-A



FEKAM-NA

Submersible pumps suitable for draining and lifting effluent wastewater and rainwater in residential building service. The pumps have been redesigned on the occasion of the forty year anniversary, making them even more reliable, resistant and ergonomic.
The impeller in technopolymer allows the passage of solid bodies up to 1" (25mm). The pumps are designed for fixed or mobile installations and are available in automatic versions with integrated float switch or in manual version without float.
The pump body and the inlet grid are in technopolymer, the motor shaft in AISI 431 motor shaft suitable for light salty water.
Robust and reliable, they have a triple ring seal in oil bath and an asynchronous motor with continuous service. Stator inserted in an airtight stainless steel casing and rotor mounted on oversized ball bearings to increase its durability.
Thermal protection incorporated in all single-phase versions. the pumps can run dry for up to 1 minute. New sealed cable gland design and new motors, more compact and efficient. Impeller bolt sealing to prevent corrosion at bolt motor shaft. In compliance with CSA Standards C22.2 No.108 - 14, UL Standard No. 778.

Flow rate minimum and maximum from 4.4 to 70.4 gpm (1 to 16 m³/h)
Head up to 25 ft (7.5 m)
Type of pumped liquid wastewater and rainwater
Free passage 1" (25 mm)
Supported liquid temperature (maximum and minimum) from 32°F to +95°F (0°C to +35°C) for domestic use
Class of protection IP 68
Motor insulation class F
Possible type of installation fixed or portable in vertical position

1979-2019 40 NOVA FEKA YEARS ANNIVERSARY Celebration

C US

ACCESSORIES PAG. 149

TECHNICAL DATA

MODEL	CODE	ELECTRICAL DATA						
		VOLTAGE 60 Hz	P1 MAX kW	P2 NOMINAL		In A	CAPACITOR	
				kW	HP		µF	Vc
FEKA 300 MA	60198427H	115-120	0.4	0.2	0.3	4.0	20	250
FEKA 300 MNA	60200871H	115-120	0.4	0.2	0.3	4.0	20	250
FEKA 600 MA	60198424H	115-120	0.7	0.5	0.6	6.3	20	250
FEKA 600 MNA	60200872H	115-120	0.7	0.5	0.6	6.3	20	250

RANGE PERFORMANCE

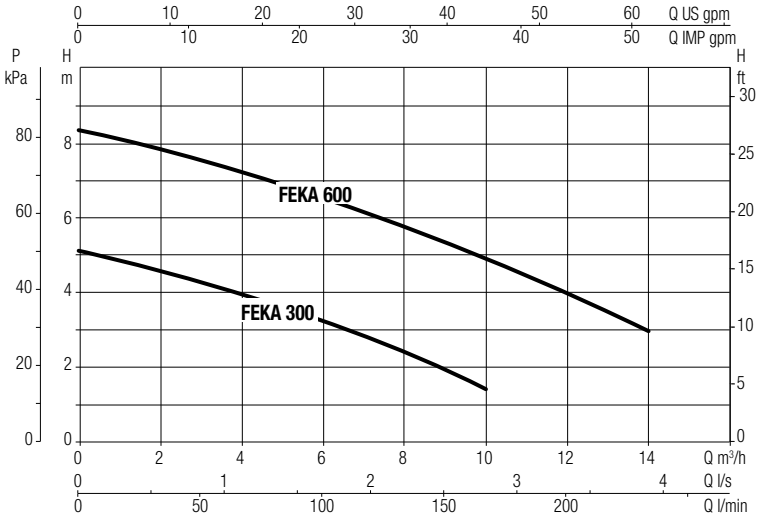

FEKA 40th

SUBMERSIBLE PUMPS FOR EFFLUENT

DIMENSIONS AND WEIGHT

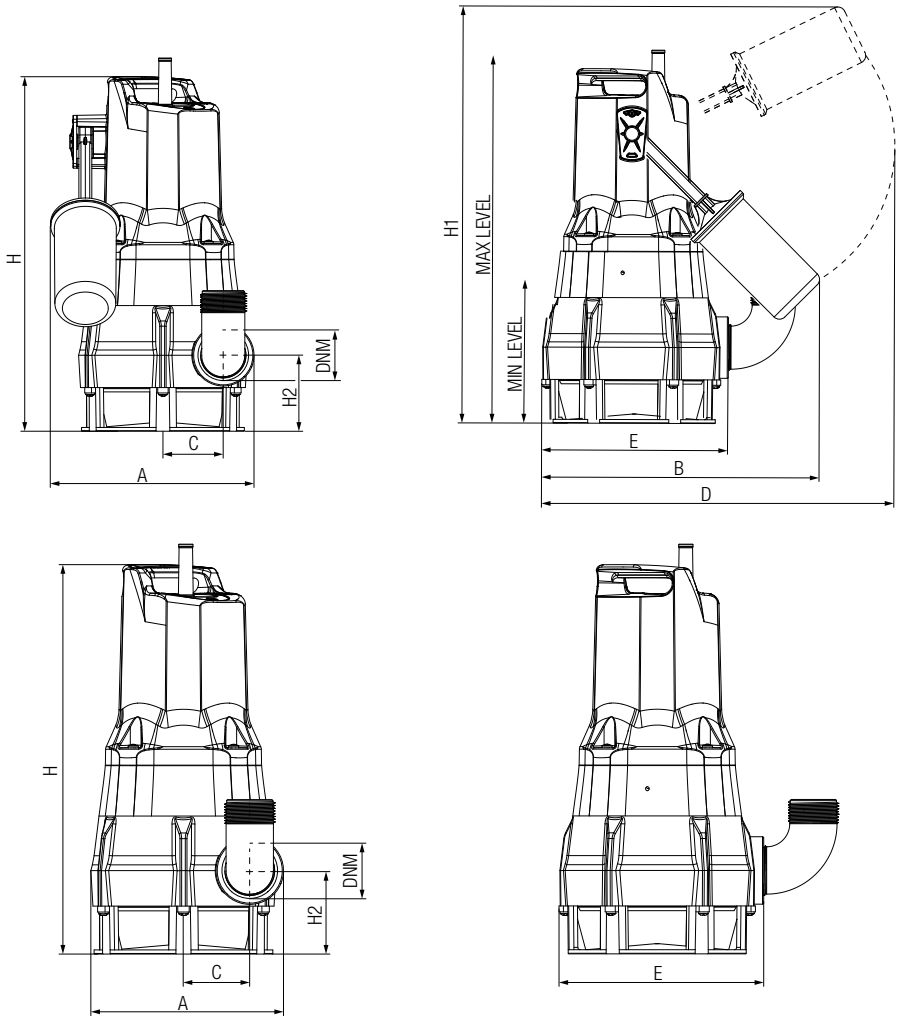

MODEL	units	A	B	C	D	E	H	H1	H2	LEV. MIN	DNM NPT	PACKING DIMENSIONS			CABLE LENGHT	VOLUME	WEIGHT
												L/A	L/B	H			
FEKA 300 MA	inch	7.4	10	2.2	11.7	6.9	13	14	2.8	3.7	1"1/4	11.3	8	17	16 ft	0.9 ft³	10.1 lbs
	mm	189	255	56	296	174	329	355	71	95		287	202	431	5 m	0.025 m³	4.6 Kg
FEKA 300 MNA	inch	6.4	-	2.2	-	6.9	13	-	2.8	-	1"1/4	11.3	8	17	16 ft	0.9 ft³	10.4 lbs
	mm	163	-	56	-	174	329	-	71	-		287	202	431	5 m	0.025 m³	4.7 Kg
FEKA 600 MA	inch	7.4	10	2.2	11.7	6.9	13.7	17.4	2.8	7.5	1"1/4	11.3	8	17	16 ft	0.9 ft³	15.4 lbs
	mm	189	255	56	296	174	349	443	71	190		287	202	431	5 m	0.025 m³	7 Kg
FEKA 600 MNA	inch	6.4	-	2.2	-	6.9	13.7	-	2.8	-	1"1/4	11.3	8	17	16 ft	0.9 ft³	15.4 lbs
	mm	163	-	56	-	174	349	-	71	-		287	202	431	5 m	0.025 m³	7 Kg

DAB PUMPS reserves the right to make modifications without notice

CLEAR ANSWER

PUMPS FOR POUND FOUNTAINS & WATER FALLS



Submersible pumps to circulate water in garden ponds, create water falls and play water features.
Designed to work in both horizontal and vertical installations.
Suitable to pump clear water containing particles with maximum diameter up to 1/3" (8.5 mm).

- Circulating water in Garden ponds
- Water falls
- Fountains
- Water features

In compliance with CSA Standards C22.2 No.108 - 14, UL Standard No. 778.

TECHNICAL DATA

MODEL	CODE	HP	WATTS	VOLTS	FREQUENCY	AMPS	MAX SOLIDS	MAX FLOW	MAX HEAD	DISCHARGE
CLEAR ANSWER 1	60160007	1/4	280	115	60 Hz	2.4	0.3"	31 gpm	21 ft	1" 1/4 NPT
							7 mm	117 l/min	6.4 m	
CLEAR ANSWER 2	60160011	1/3	370	115	60 Hz	3.4	0.4"	44 gpm	30 ft	
							10 mm	166 l/min	9.1 m	
CLEAR ANSWER 3	60160014	1/2	820	115	60 Hz	7.6	0.4"	70 gpm	34 ft	
							10 mm	265 l/min	10.4 m	

RANGE PERFORMANCE

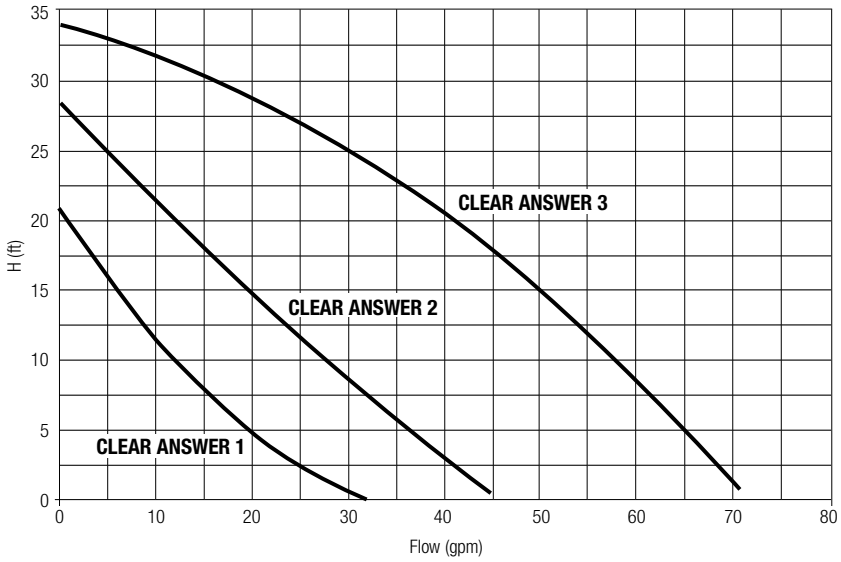

DIMENSIONS

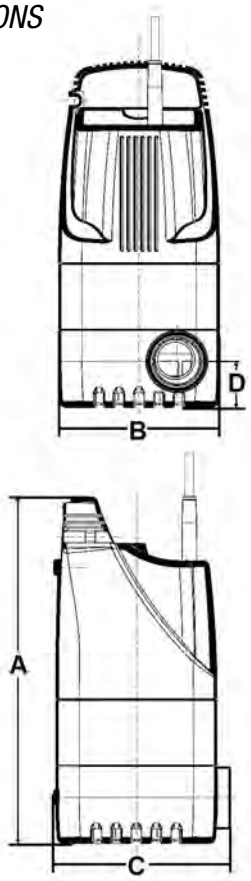

DIMENSIONS AND WEIGHT

MODEL	units	A	B	C	D	CABLE LENGHT	WEIGHT	Q.TY x PALLET
CLEAR ANSWER 1	inch	10.5"	5.5"	6.1"	1.6"	16 ft	10.5 lbs	54
	mm	267	140	155	41	5 m	4.8 Kg	
CLEAR ANSWER 2	inch	10.5"	5.5"	6.1"	1.6"	16 ft	11.0 lbs	
	mm	267	140	155	41	5 m	5 Kg	
CLEAR ANSWER 3	inch	11.8"	5.5"	6.1"	1.6"	16 ft	15.4 lbs	
	mm	300	140	155	41	5 m	7 Kg	

SOLID ANSWER

PUMPS FOR POUND FOUNTAINS & WATER FALLS



Submersible pumps to circulate water in garden ponds, create water falls and play water features.
Designed to work in both horizontal and vertical installations.
Suitable to pump clear water containing particles with maximum diameter up to 1" 1/4 (31 mm).

- Circulating water in Garden ponds
- Water falls
- Fountains
- Water features

In compliance with CSA Standards C22.2 No.108 - 14, UL Standard No. 778.

C US

TECHNICAL DATA

MODEL	CODE	HP	WATTS	VOLTS	FREQUENCY	AMPS	MAX SOLIDS	MAX FLOW	MAX HEAD	DISCHARGE
SOLID ANSWER 4	60161595	1/4	235	115	60 Hz	1.9	1" 1/4	24 gpm	11.5 ft	1" 1/4 NPT
							31 mm	90 l/miin	3.5 m	
SOLID ANSWER 5	60161596	1/3	320	115	60 Hz	2.4	1" 1/4	32 gpm	16.4 ft	
							31 mm	121 l/min	5.0 m	
SOLID ANSWER 6	60161597	1/2	880	115	60 Hz	8.0	1" 1/4	54 gpm	29.5 ft	
							31 mm	204 l/min	9.0 m	

RANGE PERFORMANCE

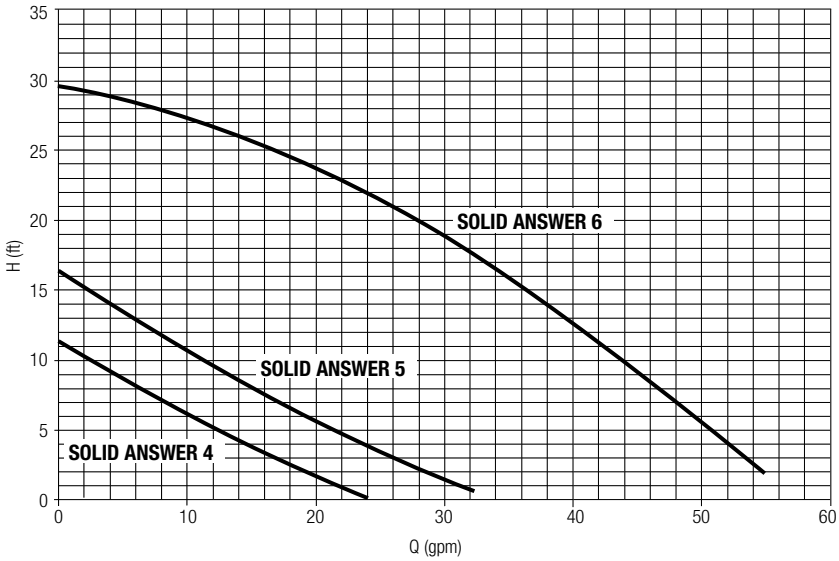

DIMENSIONS

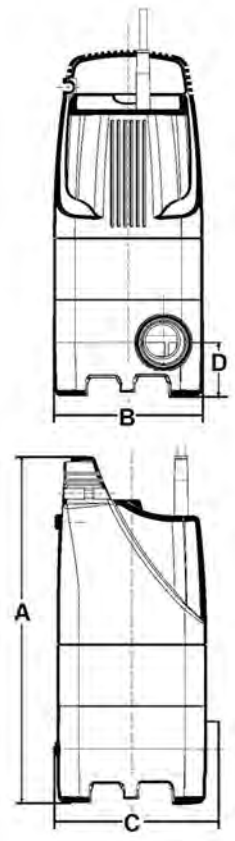

DIMENSIONS AND WEIGHT

MODEL	units	A	B	C	D	CABLE LENGHT	WEIGHT	Q.TY x PALLET
SOLID ANSWER 4	inch	10.5"	5.5"	6.1"	1.6"	16 ft	10.5 lbs	54
	mm	267	140	155	41	5 m	4.8 Kg	
SOLID ANSWER 5	inch	10.5"	5.5"	6.1"	1.6"	16 ft	11.0 lbs	
	mm	267	140	155	41	5 m	5.0 Kg	
SOLID ANSWER 6	inch	11.8"	5.5"	6.1"	1.6"	16 ft	15.4 lbs	
	mm	300	140	155	41	5 m	7.0 Kg	

DAB PUMPS reserves the right to make modifications without notice

FEKA BVP

SEWAGE PUMPS



Powerful submersible pumps for drainage and emptying duty. Designed for pumping sewage water containing solid particles of no more than 1.5" (38mm) in diameter. Anti-corrosion and anti-oxidation materials.
Motor with THERMALPROTECTION against overheating.
Wear-resistant motor shaft and impeller.
Excellent motor cooling to allow pump to run even when only partially submerged.
Automatic version equipped with float switch for automatic STARTING and stopping of the pump, and Manual version.
Equipped with power cable with plug, and 3-level union, without check valve. In compliance with CSA Standards C22.2 No.108 - 14, UL Standard No. 778.

Operating range
from 4.4 to 105.7 gpm (1 to 24 m^3/h) with head up to 39 ft (12 m)

Liquid temperature range
from 32°F to +95°F (0°C to +35°C)

Pumped liquid
Sewage water with maximum solid particle size 1.5" (38mm)

Max. immersion depth 23 ft (7 m)

TECHNICAL DATA

MODEL	CODE	ELECTRICAL DATA						
		VOLTAGE 60 Hz	P1 MAX kW	P2 NOMINAL		In A	CAPACITOR	
				kW	HP		µF	Vc
FEKA BVP 700 M-A	60152204	1x115 V~	1.10	0.71	0.95	10.4	30	250
FEKA BVP 750 M-A	60146279	1x115 V~	1.10	0.71	0.95	10.5	30	250

RANGE PERFORMANCE

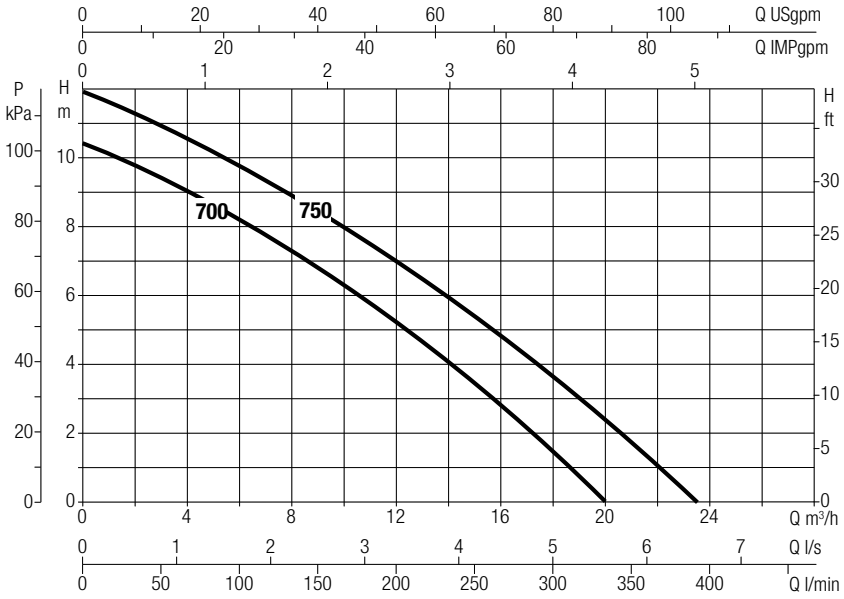

DIMENSIONS

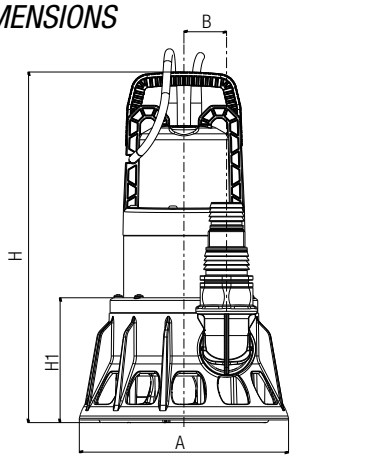

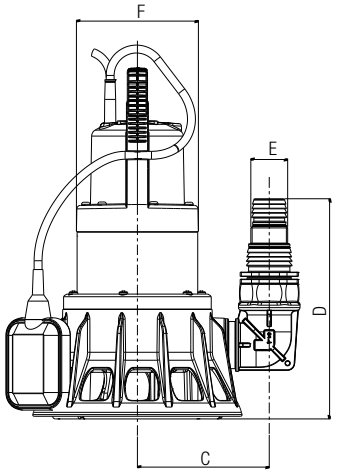

DIMENSIONS AND WEIGHT

MODEL	units	A	B	C	D	E (NPT)	F	H	H1	DNM (NPT)	CABLE ft	WEIGHT lbs	Q.TY x PALLET
FEKA BVP 700 M-A	inch	9.4	1.9	5.9	9.8	1" 1/4	5.5	15.7	5.6	1"1/2	16 ft	17.6 lbs	27
	mm	240	49	150	250		140	400	142		5 m	8 Kg	
FEKA BVP 750 M-A	inch	9.4	1.9	5.9	9.8	1" 1/4	5.5	15.7	5.6	1"1/2	16 ft	17.6 lbs	27
	mm	240	49	150	250		140	400	142		5 m	8 Kg	

DRENAG 1000 - 1200

SUBMERSIBLE PUMPS



Submersible electric pump in AISI 304 Stainless Steel: pump body, impeller, motor flange, filter and filter cover, motor casing, outer casing with handle, cable compartment cover.
Shaft in AISI 316 stainless steel.
Handle coated with insulating rubber.
Double mechani-cal seal with oil chamber interposed, carbon/alumina on motor side and silicon/silicon carbide on pump side. **Dry motor,** asynchronous, watertight, cooled by the pumped liquid itself. Standard thermal protection in the winding. Capacitor permanently on in the single-phase version. 33 ft (10 m) power cables
All models can be supplied either with or without float. In compliance with CSA Standards C22.2 No.108 - 14, UL Standard No. 778.

Operating range
from 13.2 to 105.37 gpm (3 to 24 m³/h) with head up to 47 ft (14.2 m)

Liquid temperature range
from 32°F to +95°F (0°C to +35°C) for domestic use
from 32°F to +122°F (0°C to +50°C)

Pumped liquid characteristics
rain water, ground water, sandy water from building yards and clean waste waters, not aggressive

Maximum working temperature
+104°F (40°C) with the motor out of the water

Free passage through the suction grid 0.4" (10mm)

Maximum immersion depth 23 ft (7 m)

Protection level IP 68

Insulation class F

Installation fixed or portable, in a vertical position

C US

ACCESSORIES
PAG. 149

TECHNICAL DATA

MODEL	CODE	ELECTRICAL DATA						
		VOLTAGE 60 Hz	P1 MAX kW	P2 NOMINAL		In A	CAPACITOR	
				kW	HP		µF	Vc
DRENAG 1000 MA	60193466	1 ~ 220-230V	1.43	1	1.36	6.63	25	450
DRENAG 1000 MNA	60193468	1 ~ 220-230V	1.43	1	1.36	6.63	25	450
DRENAG 1000 TNA	60193470	3 ~ 220-277V	1.58	1	1.36	2.51	-	-
DRENAG 1200 MA	60193467	1 ~ 220-230V	1.65	1.2	1.6	8.63	30	450
DRENAG 1200 MNA	60193469	1 ~ 220-230V	1.65	1.2	1.6	8.63	30	450
DRENAG 1200 TNA	60193471	3 ~ 220-277V	1.66	1.2	1.6	3.34	-	-

RANGE PERFORMANCE

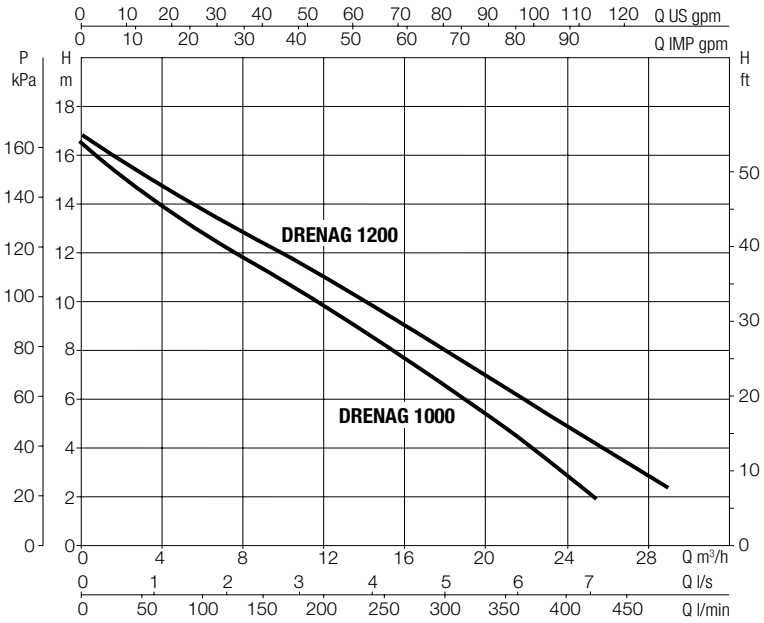

DAB PUMPS reserves the right to make modifications without notice

DRENAG 1000 - 1200

SUBMERSIBLE PUMPS

INSTALLATION

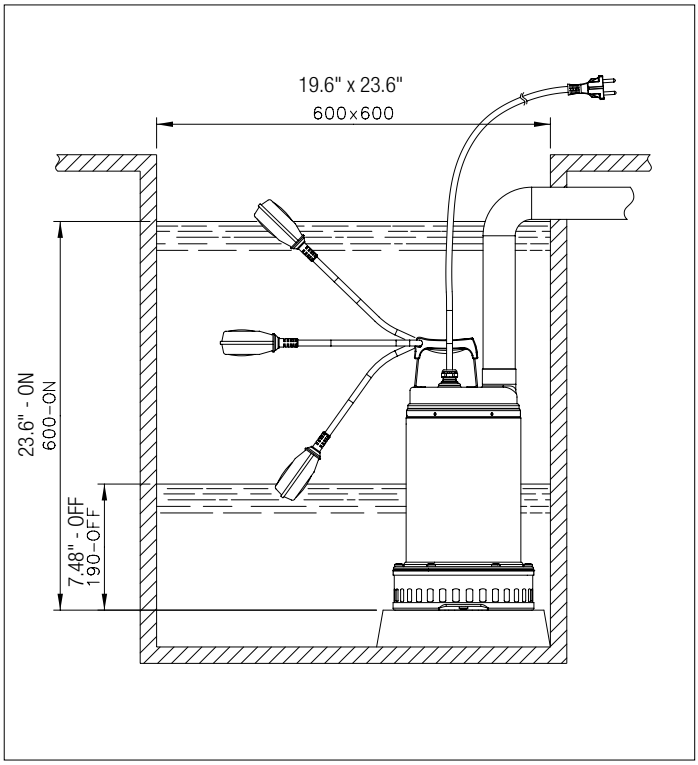

DIMENSIONS

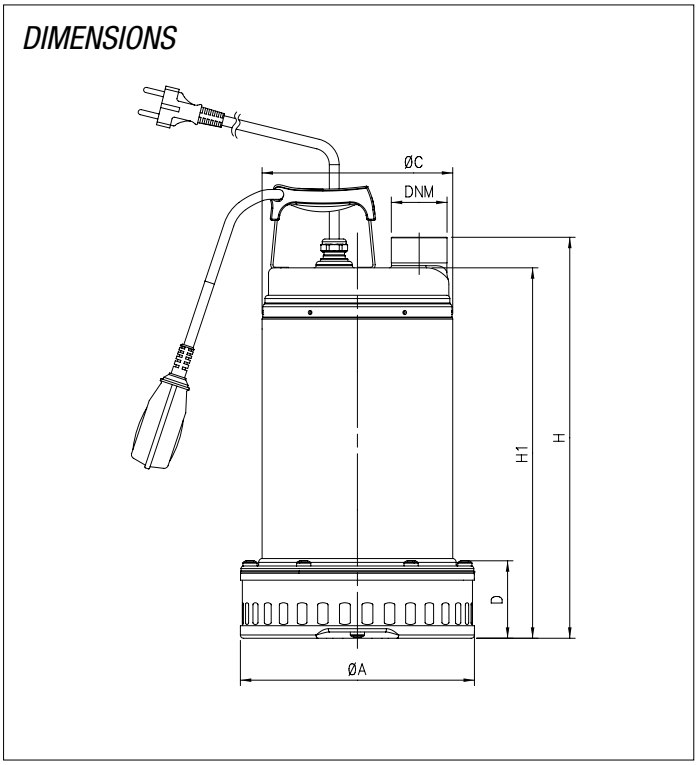

DIMENSIONS AND WEIGHT

MODEL	UNITS	Ø A	Ø B	H	H1	Ø DNM (NPT)	PACKING DIMENSIONS			CABLE LENGHT	FREE PASSAGE	WEIGHT
							L/A	L/B	H			
DRENAG 1000	inch	8.5	6.9	2.8	15.2	1" ½	9.4	23.6	9.8	33 ft	0.4	37.5 lbs
	mm	215	175	71	385		240	600	250	10 m	10	17
DRENAG 1200	inch	8.5	6.9	2.8	15.2	1" ½	9.4	23.6	9.8	33 ft	0.4	40.8 lbs
	mm	215	175	71	385		240	600	250	10 m	10	18.5

FEKA VS

SEWAGE PUMPS



Submersible centrifugal pump with liquid vortex cast stainless steel impeller, suitable for pumping sewage water and waste water in general containing solids up to a maximum size of 2" (50 mm).
Handle with insulating rubber cover. AISI 316 stainless steel drive shaft. Double mechanical seal with intermediate oil chamber (atoxic oil), in carbon/alumina on the motor side and silicon carbide/silicon carbide on the pump side.
Dry, asynchronous, sealed and cooled by the pumped liquid. Rotor mounted on greased for-life ball bearings, oversized and selected to guarantee greater noise reduction and duration. Thermal protection as standard for single-phase version, and the user's responsibility for the three-phase version. Constantly active capacitor on the single-phase version. In compliance with CSA Standards C22.2 No.108 - 14, UL Standard No. 778.

Motor protection class IP 68

Insulation class F

Power supply cable
33 ft (10 m) of cable with plug for the single-phase version and 33 ft (10 m) of cable for the three-phase version

Operating range
from 0 to 140 gpm (0 - 31.8 m^3/h)
with head up to 46 ft (14 m)

Pumped liquid
sewer water and waste water in general and non aggressive

Liquid temperature range
from 32°F to 95°F (0°C to +35°C) for household usefrom 32°F to 122°F (0°C to +50°C) for other uses

Maximum ambient temperature for pump running with submerged motor +104 F (+40°C)

Maximum immersion depth 33 ft (10 m)

Installation fixed or portable, vertical

Free Passage 2 in (50 mm)

C US

ACCESSORIES PAG. 149

TECHNICAL DATA

MODEL	CODE	ELECTRICAL DATA						
		VOLTAGE 60 Hz	P1 MAX kW	P2 NOMINAL		In A	CAPACITOR	
				kW	HP		µF	VC
FEKA VS 550 M-A	60193434	1 ~ 115V 60Hz	0.84	0.55	0.75	8.7	50	200
FEKA VS 550 M-A	60193436	1 ~ 220-230V 60Hz	0.91	0.55	0.75	3.9 - 4	20	450
FEKA VS 550 M-NA	60193440	1 ~ 115V 60Hz	0.84	0.55	0.75	8.7	50	200
FEKA VS 550 M-NA	60193442	1 ~ 220-230V 60Hz	0.91	0.55	0.75	3.9 - 4	20	450
FEKA VS 550 T-NA*	60193446	3 ~ 220-277V 60Hz	0.80	0.55	0.75	2.72 - 2.42	-	-
FEKA VS 1000 M-A	60193438	1 ~ 220-230V 60Hz	1.28	1.00	1.36	6.63	25	450
FEKA VS 1000 M-NA	60193444	1 ~ 220-230V 60Hz	1.28	1.00	1.36	6.63	25	450
FEKA VS 1000 T-NA*	60193448	3 ~ 220-277V 60Hz	1.19	1.00	1.36	2.51	-	-
FEKA VS 1200 M-A	60193439	1 ~ 220-230V 60Hz	1.76	1.20	1.60	8.63	30	450
FEKA VS 1200 M-NA	60193445	1 ~ 220-230V 60Hz	1.76	1.20	1.60	8.63	30	450
FEKA VS 1200 T-NA*	60193449	3 ~ 220-277V 60Hz	1.74	1.20	1.60	3.44	-	-

* 3x220/277 V ~ available on request

DAB PUMPS reserves the right to make modifications without notice

FEKA VS

SEWAGE PUMPS

RANGE PERFORMANCE

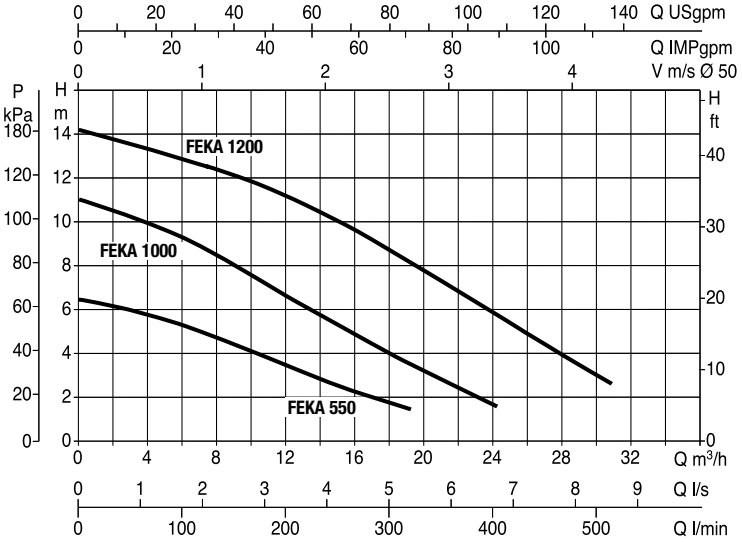

DIMENSIONS AND WEIGHT

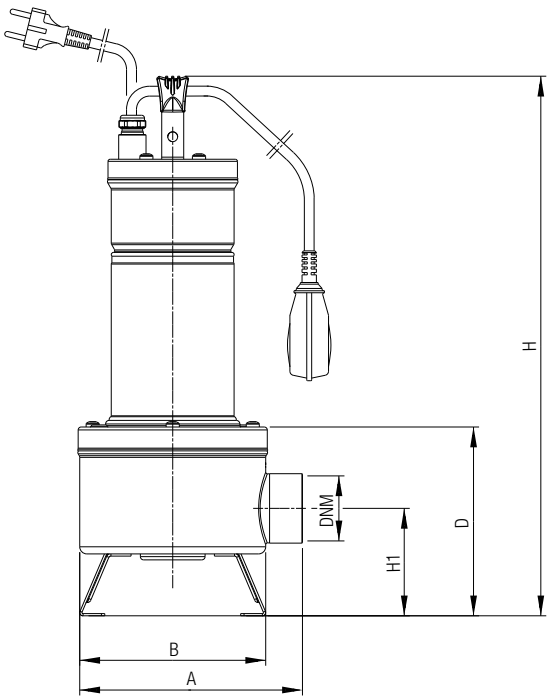

MODEL	unit	A	B	D	H	H1	Ø DNM (NPT)	PACKING DIMENSIONS			CABLE LENGHT	FREE PASSAGE	WEIGHT	Q.TY x PALLET
								L/A	L/B	H				
FEKA VS 550	inch	8	6.7	6.8	19.4	3.9	2"	9.4	23.6	9.4	33 ft	2	35.9 lbs	24
	mm	203	170	172	492	98		240	600	240	10 m	50	16.3 Kg	
FEKA VS 1000	inch	8	6.7	6.8	21.1	3.9	2"	9.4	23.6	9.4	33 ft	2	38.6 lbs	24
	mm	203	170	172	537	98		240	600	240	10 m	50	17.5 Kg	
FEKA VS 1200	inch	8	6.7	6.8	21.1	3.9	2"	9.4	23.6	9.4	33 ft	2	45.9 lbs	24
	mm	203	170	172	537	98		240	600	240	10 m	50	17.5 Kg	

DRENAG FX

SUBMERSIBLE PUMPS FOR DRAINAGE OF SANDY WATER AND WATER FROM CONSTRUCTION SITE



DRENAG FX

Submersible pump for the draining clear water, groundwater or rainwater in commercial building service; the pumps is suitable for applications requiring with high head.
In compliance with CSA Standards C22.2 No.108 - 14, UL Standard No. 778. Suitable for fixed installations with coupling device or mobile if placed directly on the bottom of the tank. The reduced dimensions and the outlet connection both flanged and threaded make it ideal for replacements. Designed for fast maintenance thanks to a construction solution that provides easy access to the main components of the pump. Open impeller and anti-wear rubber disc for use even in the presence of abrasive particles. Double mechanical seal in silicon carbide completely protected in an oil chamber and not in contact with the pumped liquid. Motor shaft in stainless steel AISI 431 for P2 <1.2 kW and AISI 304 for P2> 1.5 kW, resin cable gland with quick coupling. Single-phase versions with integrated capacitor, available with float for automatic operation (MA) with powers up to 1.5 kW. In the three-phase versions the protection is the responsibility of the user.
IECEX (Ex db IIB T4 Gb) available starting from 2022.

Flow rate maximum 136 gpm (30.9 m^3/h)
Head up to 105 ft (32 m)
Type of pumped liquid clear water, rainwater and sandy water from construction site
Free passage 0.4 in (10 mm)
Nominal speed RPM 3480
Supported liquid temperature (max)
122°F (+50°C)
140°F (+60°C)for a short period of time
104°F (+40°C) for ATEX version
Flanged and threated 1" 1/2, DN 32, DN 40
Impeller type open
Class of protection IP 68
Motor insulation class F
Dry run time 10 min
Possible type of installation
mobile if on the floor, fixed on the coupling
Special versions on request
different cable lenght, different voltage

C US

ACCESSORIES
PAG. 149

TECHNICAL DATA

MODEL	CODE	VOLTAGE 60 Hz	P1 MAX W	P2 NOMINAL		In A	DN mm
				kW	HP		
DRENAG FX 15.11 MNA	60194165	120	1.4	1.1	1.5	12.8	DN32 PN16/DN40 PN6
DRENAG FX 15.11 TNA	60194168	208-220	1.2	1.1	1.5	4.23 - 4.4	DN32 PN16/DN40 PN6
DRENAG FX 15.11 MNA	60194114	208-240	1.3	1.1	1.5	5.87 - 6.08	DN32 PN16/DN40 PN6
DRENAG FX 15.11 TNA	60202928	380	1.2	1.1	1.5	2.5	DN32 PN16/DN40 PN6
DRENAG FX 15.11 TNA	60202931	460	1.2	1.1	1.5	2.0	DN32 PN16/DN40 PN6
DRENAG FX 15.11 TNA	60202934	575	1.2	1.1	1.5	1.6	DN32 PN16/DN40 PN6
DRENAG FX 15.15 TNA	60194224	208-220	1.6	1.5	2.0	5.8 - 5.96	DN32 PN16/DN40 PN6
DRENAG FX 15.15 MNA	60194116	208-240	1.8	1.5	2.0	8.16 - 8.17	DN32 PN16/DN40 PN6
DRENAG FX 15.15 TNA	60202929	380	1.6	1.5	2.0	3.4	DN32 PN16/DN40 PN6
DRENAG FX 15.15 TNA	60202932	460	1.6	1.5	2.0	2.7	DN32 PN16/DN40 PN6
DRENAG FX 15.15 TNA	60200935	575	1.6	1.5	2.0	2.2	DN32 PN16/DN40 PN6
DRENAG FX 15.22 TNA	60194285	208-220	2.6	2.2	3.0	8.76 - 9.07	DN32 PN16/DN40 PN6
DRENAG FX 15.22 MNA	60194118	208-240	2.8	2.2	3.0	13 - 12.98	DN32 PN16/DN40 PN6
DRENAG FX 15.22 TNA	60202930	380	2.6	2.2	3.0	5.2	DN32 PN16/DN40 PN6
DRENAG FX 15.22 TNA	60202933	460	2.5	2.2	3.0	3.9	DN32 PN16/DN40 PN6
DRENAG FX 15.22 TNA	60202936	575	2.6	2.2	3.0	3.2	DN32 PN16/DN40 PN6

DAB PUMPS reserves the right to make modifications without notice

DRENAG FX

SUBMERSIBLE PUMPS FOR DRAINAGE OF SANDY WATER AND WATER FROM CONSTRUCTION SITE

RANGE PERFORMANCE

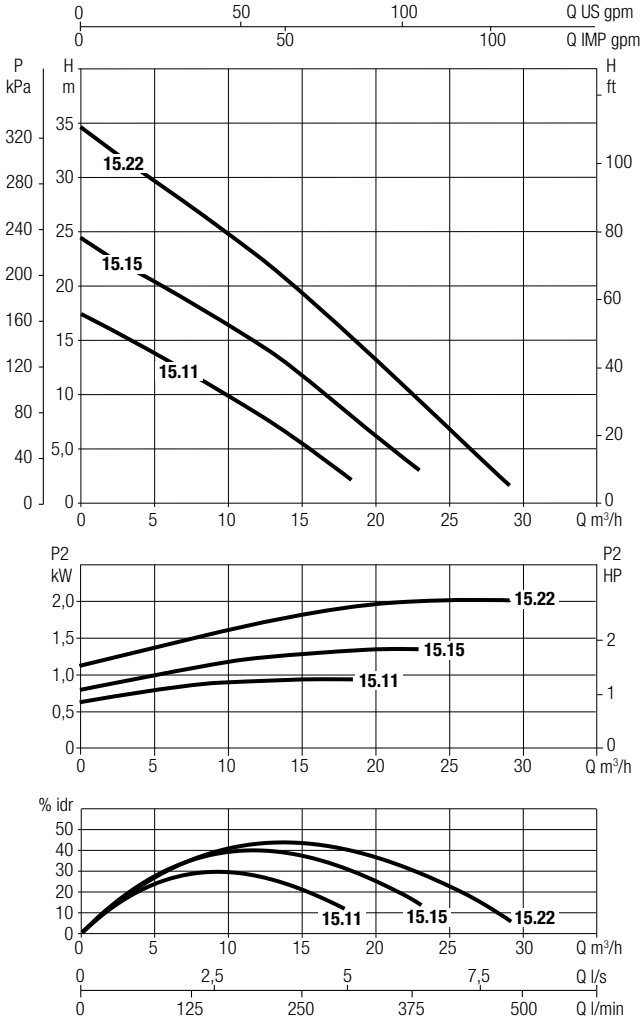

DIMENSIONS

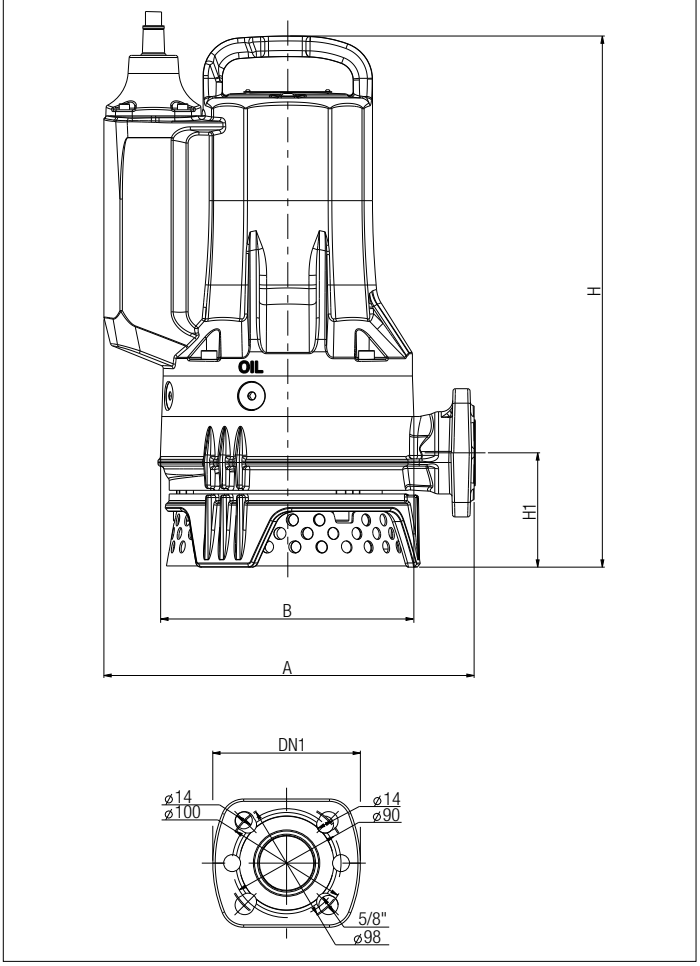

DIMENSIONS AND WEIGHT

MODEL	units	FREE PASSAGE	A	B	H		H1	DELIVERY				PACKING DIMENSIONS			WEIGHT
						Ex		NPT	DN1	HOLES	D	L/A	L/B	H	
DRENAG FX 15.11	inch	0.4	12	8.5	16.2	16.9	3.7	Rp 1"1/2	DN32 PN10 / 6	4	100-90	26	14.6	15.7	77.2 lbs
	mm	10	306	215	412	430	95		DN40 PN6	2	90	660	370	400	35 Kg
DRENAG FX 15.15	inch	0.4	12	8.5	16.6	17.3	3.7	Rp 1"1/2	DN32 PN10 / 6	4	100-90	26	14.6	15.7	83.8 lbs
	mm	10	306	215	421	439	95		DN40 PN6	2	90	660	370	400	38 Kg
DRENAG FX 15.22	inch	0.4	12	8.5	17.3	18	3.7	Rp 1"1/2	DN32 PN10 / 6	4	100-90	26	14.6	15.7	86 lbs
	mm	10	306	215	439	456	95		DN40 PN6	2	90	660	370	400	39 Kg

GRINDER FX

SUBMERSIBLE PUMPS WITH CUTTING SYSTEM FOR SEWAGE



GRINDER FX

Submersible pump with shredder designed for lifting and transferring sewage water in commercial building service.
In compliance with CSA Standards C22.2 No.108 - 14, UL Standard No. 778 which applies to sewage lifting plants containing faecal material in buildings and construction sites.
Suitable for fixed installations with a coupling or mobile if the pumps is placed directly on the bottom of the tank. Thanks to the shredder, the pump is suitable for installations with small diameter pipes or instalation that require high pressures. High strength shredding system in AISI 630 steel. Double mechanical seal in silicon carbide completely protected in oil bath and not in contact with the pumped liquid. Motor shaft in AISI 304 stainless steel, resin-fastened cable gland. The reduced overall dimensions and the outlet ports both flanged and threaded make it ideal for replacements. Maintenance is fast due to its design that allows easy access to the pump's main components. Single-phase versions with integrated capacitor, available with float for automatic operation (MA) with powers up to 1.5 kW. In the three-phase versions the protection is the user's responsibility.
IECEX (Ex db IIB T4 Gb) available starting from 2022.

Flow rate maximum 87.2 gpm (19.8 m^3/h)
Head up to 108 ft (33 m)
Type of pumped liquid loaded waters with filamentary bodies, paper or textile material
Nominal speed RPM 3480
Supported liquid temperature (max)
122°F (+50°C)
140°F (+60°C)for a short period of time
104°F (+40°C) for ATEX version
Flanged and threated from 1"1/2, DN 32, DN 40
Impeller type Grinder
Class of protection IP 68
Motor insulation class F
Dry run time 10 min
Possible type of installation
mobile on the ground or fixed on a coupling device
Special versions on request different cable lengths, different voltages and frequencies

C US

ACCESSORIES PAG. 149

TECHNICAL DATA

MODEL	CODE	VOLTAGE 60 Hz	P1 MAX W	P2 NOMINAL		In A	DN mm
				kW	HP		
GRINDER FX 15.11 MNA	60194123	120	1.4	1.1	1.5	6.12 - 6.23	40
GRINDER FX 15.11 MNA	60194124	208-240	1.4	1.1	1.5	6.12 - 6.23	40
GRINDER FX 15.11 TNA	60194177	208-220	1.2	1.1	1.5	4.4 - 4.55	40
GRINDER FX 15.11 TNA	60202937	380	1.2	1.1	1.5	2.6	40
GRINDER FX 15.11 TNA	60202940	460	1.2	1.1	1.5	2.1	40
GRINDER FX 15.11 TNA	60202943	575	1.2	1.1	1.5	1.6	40
GRINDER FX 15.15 TNA	60194232	208-220	1.7	1.5	2.0	6.2 - 6.29	40
GRINDER FX 15.15 MNA	60194126	208-240	1.8	1.5	2.0	8.4 - 8.26	40
GRINDER FX 15.15 TNA	60202938	380	1.7	1.5	2.0	3.6	40
GRINDER FX 15.15 TNA	60202941	460	1.7	1.5	2.0	2.8	40
GRINDER FX 15.15 TNA	60202944	575	1.6	1.5	2.0	2.2	40
GRINDER FX 15.22 TNA	60194291	208-220	2.6	2.2	3.0	8.94 - 9.07	40
GRINDER FX 15.22 MNA	60194128	208-240	2.7	2.2	3.0	12.65 - 12.67	40
GRINDER FX 15.22 TNA	60202939	380	2.6	2.2	3.0	5.2	40
GRINDER FX 15.22 TNA	60202942	460	2.5	2.2	3.0	4.0	40
GRINDER FX 15.22 TNA	60202945	575	2.5	2.2	3.0	3.1	40

DAB PUMPS reserves the right to make modifications without notice

GRINDER FX

SUBMERSIBLE PUMPS WITH CUTTING SYSTEM FOR SEWAGE

RANGE PERFORMANCE

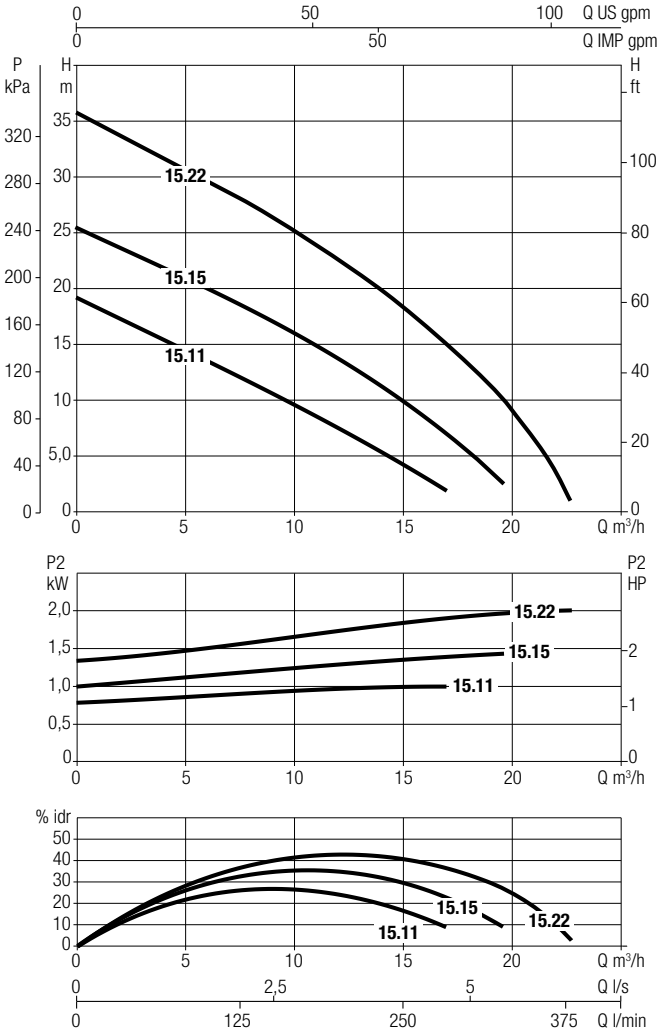

DIMENSIONS

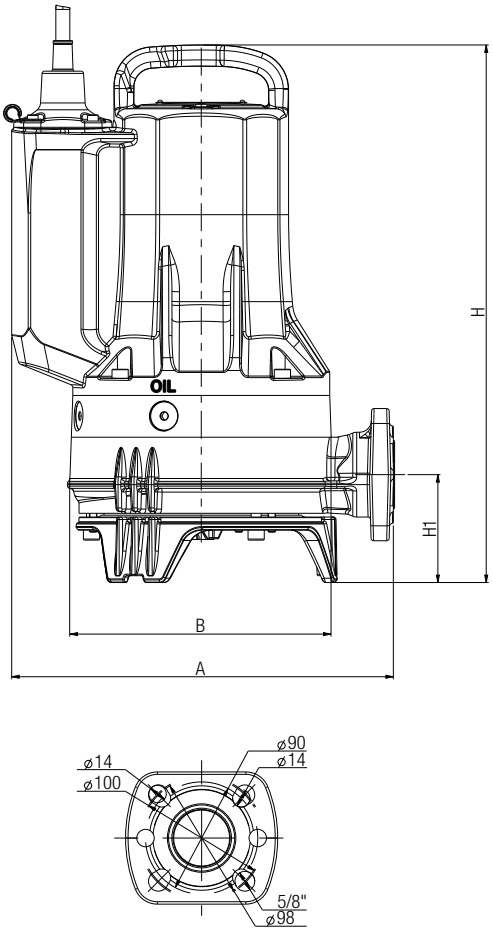

DIMENSIONS AND WEIGHT

MODEL	units	FREE PASSAGE	A	B	H		H1	DELIVERY				PACKING DIMENSIONS			CABLE LENGHT	WEIGHT
						Ex		NPT	DN1	HOLES	D	L/A	L/B	H		
GRINDER FX 15.11	inch	-	12	8.5	15.9	16.6	3.4	Rp 1"1/2	DN32 PN10 / 6 DN40 PN6	4 2	100-90 90	26	14.6	15.7	33 ft	77.2 lbs
	mm	-	306	215	404	421	87					660	370	400	10 m	35 Kg
GRINDER FX 15.15	inch	-	12	8.5	16.3	16.9	3.4	Rp 1"1/2	DN32 PN10 / 6 DN40 PN6	4 2	100-90 90	26	14.6	15.7	33 ft	83.8 lbs
	mm	-	306	215	413	430	87					660	370	400	10 m	38 Kg
GRINDER FX 15.22	inch	-	12	8.5	16.9	17.6	3.4	Rp 1"1/2	DN32 PN10 / 6 DN40 PN6	4 2	100-90 90	26	14.6	15.7	33 ft	86 lbs
	mm	-	306	215	430	448	87					660	370	400	10 m	39 Kg

FEKA FXC

SUBMERSIBLE PUMPS FOR EFFLUENT



FEKA FXC

Submersible pump for the lifting and transferring waste water coming from drains in commercial building service.
In compliance with CSA Standards C22.2 No.108 - 14, UL Standard No. 778. Pump suitable for fixed installations with a coupling or mobile device if placed on the bottom of the tank itself. Channel impeller, 2" (50 mm) free passage and anti-lock system. Suitable for waste water and waste water without the presence of long fibers, rain water and ground water. The pump is suitable for draining environments subject to flooding, when high flow rates are required. Double mechanical silicon
carbide seal completely protected in oil chamber and not in contact with the pumped liquid. AISI 304 stainless steel motor shaft, resin-fastened cable gland, quick-coupling power cable.
The small size and both flanged and threaded discharge ports make it ideal for replacements. Maintenance is fast due to its design that allows easy access to the pump's main components.
Single-phase versions with integrated condenser, available with float for automatic operation (MA) with power up to 1.5 kW. In the three-phase versions the protection is the user's responsibility.
IECEX (Ex db IIB T4 Gb) available starting from 2022.

Flow rate maximum 281 gpm (71.4 m^3/h)
Head up to 59 ft (19.3 m)
Type of pumped liquid clear water, rainwater and sandy water from construction site
Free passage 2" (50mm)
Nominal speed RPM 3480
Supported liquid temperature (max)
122°F (+50°C)
140°F (+60°C)for a short period of time
104°F (+40°C) for ATEX version
Flanged and threated from 2", DN 50, DN 65
Impeller type channel
Class of protection IP 68
Motor insulation class F
Dry run time 10 min
Possible type of installation
mobile when on the ground, fixed with coupling
Special versions on request different cable
lengths, different voltages and frequencies

C US

ACCESSORIES
PAG. 149

TECHNICAL DATA

MODEL	CODE	VOLTAGE 60 Hz	P1 MAX W	P2 NOMINAL		In A	DN mm
				kW	HP		
FEKA FXC 20.15 MNA	60194096	208-240	1.6	0.8	1.0	7.19 - 7.48	50
FEKA FXC 25.15 MNA	60194106	208-240	1.6	0.8	1.0	7.32 - 7.57	65
FEKA FXC 20.15 TNA	60194098	460	1.4	1.5	2.0	2.46	50
FEKA FXC 25.15 TNA	60194108	460	1.4	1.5	2.0	2.47	65
FEKA FXC 20.15 TNA	60194209	208-220	1.4	1.5	2.0	5.23 - 5.51	50
FEKA FXC 25.15 TNA	60194216	208-220	1.5	1.5	2.0	5.32 - 5.59	65
FEKA FXC 20.15 TNA	60202924	575	1.4	1.5	2.0	1.99	50
FEKA FXC 25.15 TNA	60202925	575	1.5	1.5	2.0	2.01	65
FEKA FXC 20.15 TNA	60202920	380	1.4	1.5	2.0	3.18	50
FEKA FXC 25.15 TNA	60202921	380	1.5	1.5	2.0	3.23	65
FEKA FXC 20.22 MNA	60194147	208-240	2.5	1.1	1.5	11.65 - 12.06	50
FEKA FXC 25.22 MNA	60194157	208-240	2.6	1.1	1.5	12.54 - 12.48	65

DAB PUMPS reserves the right to make modifications without notice

FEKA FXC

SUBMERSIBLE PUMPS FOR EFFLUENT

MODEL	CODE	VOLTAGE 60 Hz	P1 MAX W	P2 NOMINAL		In A	DN mm
				kW	HP		
FEKA FXC 20.22 TNA	60194149	460	2.4	2.2	3.0	3.86	50
FEKA FXC 25.22 TNA	60194158	460	2.6	2.2	3.0	4.00	65
FEKA FXC 20.22 TNA	60194273	208-220	2.4	2.2	3.0	8.35 - 8.73	50
FEKA FXC 25.22 TNA	60194279	208-220	2.5	2.2	3.0	8.57 - 8.9	65
FEKA FXC 20.22 TNA	60202922	380	2.4	2.2	3.0	5.04	50
FEKA FXC 25.22 TNA	60202923	380	2.5	2.2	3.0	5.14	65
FEKA FXC 20.22 TNA	60202926	575	2.3	2.2	3.0	2.97	50
FEKA FXC 25.22 TNA	60202927	575	2.4	2.2	3.0	3.06	65

RANGE PERFORMANCE

FEKA FXC 20

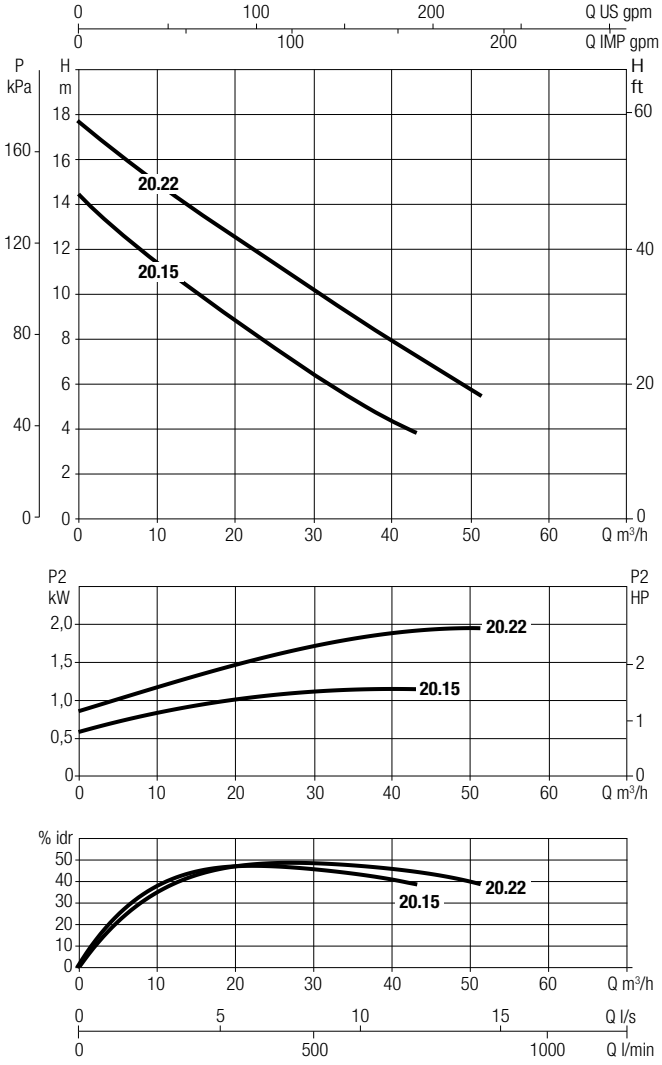

FEKA FXC 25

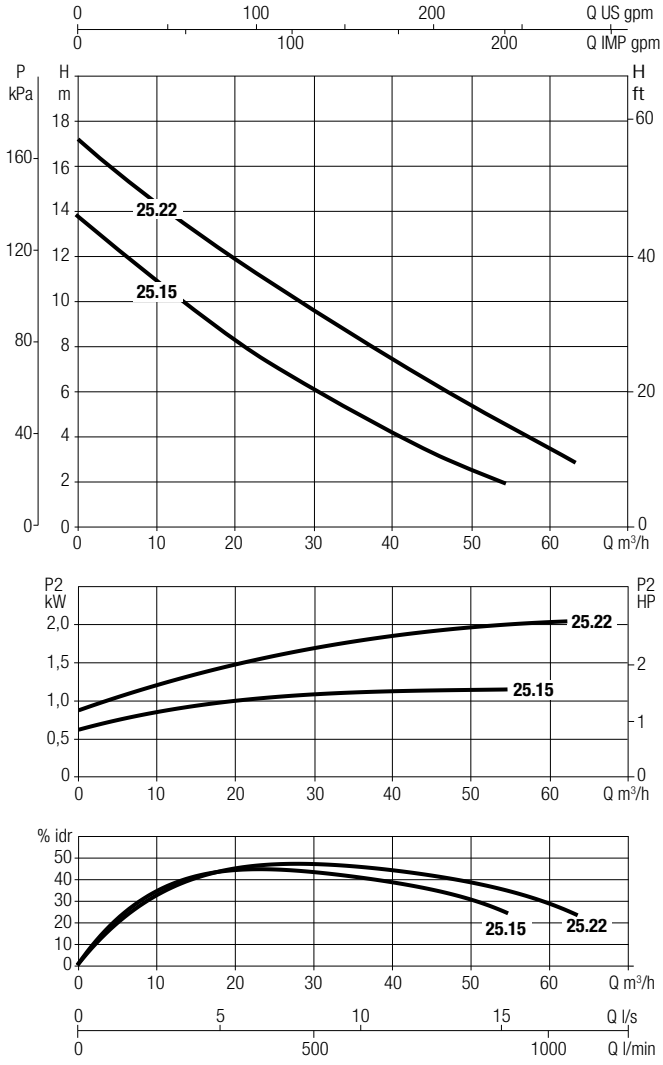

FEKA FXC

SUBMERSIBLE PUMPS FOR EFFLUENT

DIMENSIONS AND WEIGHT

FEKA FXC 20

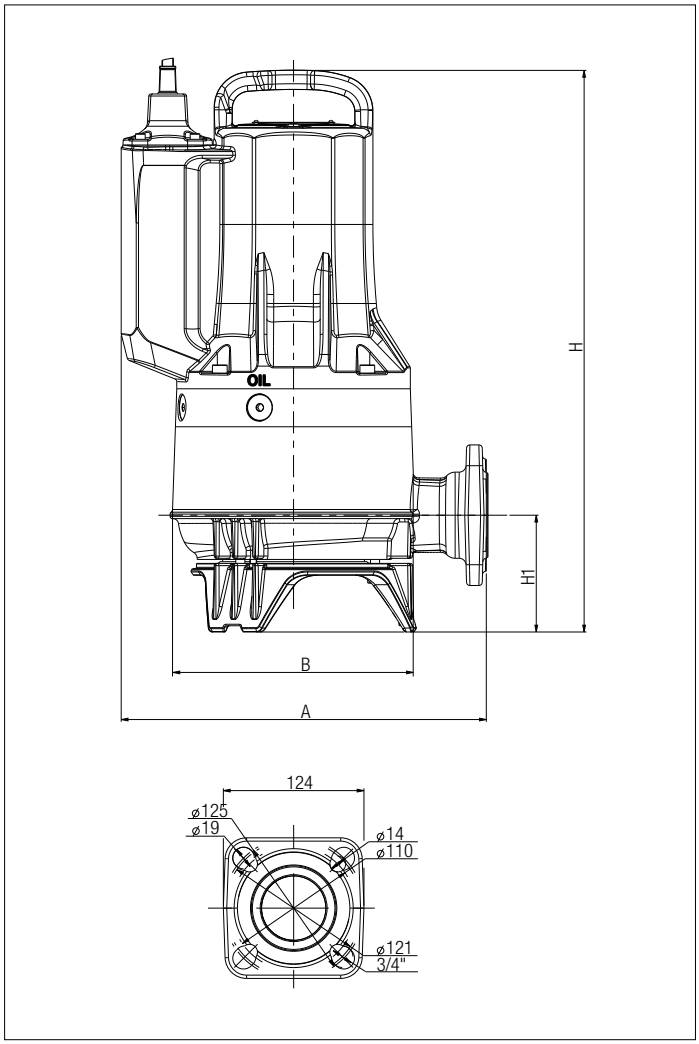

FEKA FXC 25

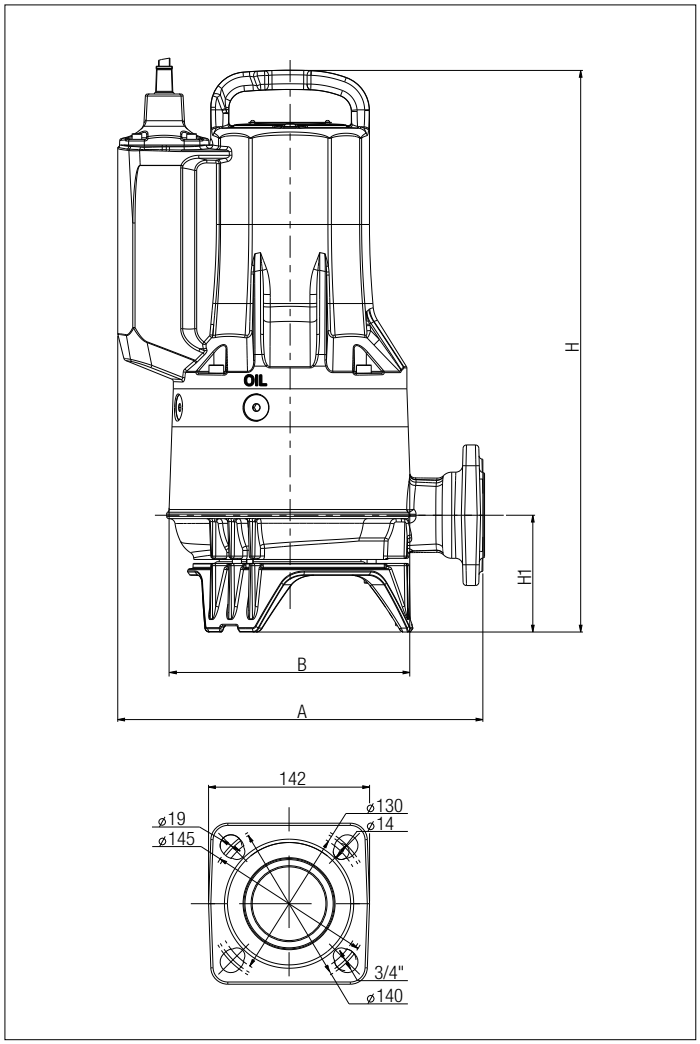

MODEL	units	FREE PASSAGE	A	B	H		H1	DELIVERY				PACKING DIMENSIONS			CABLE LENGHT	WEIGHT
						Ex		NPT	DN1	HOLES	D	L/A	L/B	H		
FEKA FXC 20.15	inch	2	12.7	8.6	18.4	19.5	4.1	Rp 2"	50 PN10/6	4	125-110	26	14.6	15.7	33 ft	92.6 lbs
	mm	50	322	218	468	496	103					660	370	400	10 m	42 Kg
FEKA FXC 20.22	inch	2	12.7	8.6	19.5	20.2	4.1	Rp 2"	50 PN10/6	4	125-110	26	14.6	15.7	33 ft	94.8 lbs
	mm	50	322	218	496	512	103					660	370	400	10 m	43 kG
FEKA FXC 25.15	inch	2	12.7	8.6	18.8	19.5	4.1	-	65 PN10/6	4	145-130	26	14.6	15.7	33 ft	94.8 lbs
	mm	50	322	218	478	496	103					660	370	400	10 m	43 Kg
FEKA FXC 25.22	inch	2	12.7	8.6	19.5	20.2	4.1	-	65 PN10/6	4	145-130	26	14.6	15.7	33 ft	97 lbs
	mm	50	322	218	496	512	103					660	370	400	10 m	44 Kg

DAB PUMPS reserves the right to make modifications without notice

FEKA FXV

SUBMERSIBLE PUMPS FOR SEWAGE



FEKA FXV

Submersible pump for draining sewage water in commercial building service.
In compliance with CSA Standards C22.2 No.108 - 14, UL Standard No. 778. Suitable for fixed installations with a coupling or mobile if the pump is placed directly on the bottom of the tank. High-performance super Vortex impeller with integral free passage. Double mechanical seal in silicon carbide completely protected in oil chamber and not in contact with the pumped liquid. Motor shaft in AISI 304 stainless steel, resin-fastened cable gland. The reduced overall dimensions and the outlet ports both flanged and threaded make it ideal for replacements. Maintenance is fast due to its design that allows easy access to the pump's main components.
Single-phase versions with integrated capacitor, available with float for automatic operation (MA) with powers up to 1.5 kW. In the three-phase versions the protection is the user's responsibility.
IECEX (Ex db IIB T4 Gb) available starting from 2022.

Flow rate maximum 262.9 gpm (59.7 m^3/h)

Head up to 61 ft (18.5 m)

Type of pumped liquid waters with filamentary bodies, paper or textile material in the presence of domestic or civil waste

Free passage
2" or 2.6" (50 mm or 65mm) depending on the model

Nominal speed RPM 3480

Supported liquid temperature (max)
122°F (+50°C)
140°F (+60°C)for a short period of time
104°F (+40°C) for ATEX version

Flanged and threated from 2", DN 50, DN 65

Impeller type vortex

Class of protection IP 68

Motor insulation class F

Dry run time 10 min

Possible type of installation
mobile when on the ground, fixed with coupling

Special versions on request different cable lengths, different voltages and frequencies

C US

ACCESSORIES
PAG. 149

TECHNICAL DATA

MODEL	CODE	VOLTAGE 60 Hz	P1 MAX W	P2 NOMINAL		In A	DN mm
				kW	HP		
FEKA FXV 20.07 MNA	60194130	120	1.4	0.8	1.0	12.85	50
FEKA FXV 20.07 MNA	60194259	208-240	1.4	0.8	1.0	6.04 - 6.23	50
FEKA FXV 20.07 TNA	60194133	208-220	1.2	0.8	1.0	4.34 - 4.5	50
FEKA FXV 20.07 TNA	60194277	380	1.2	0.8	1.0	2.6	50
FEKA FXV 25.07 MNA	60194094	120	1.4	0.8	1.0	13.01	65
FEKA FXV 25.07 MNA	60194104	208-240	1.4	0.8	1.0	6.16 - 6.28	65
FEKA FXV 25.07 TNA	60194097	208-220	1.3	0.8	1.0	4.38 - 4.57	65
FEKA FXV 25.07 TNA	60194107	380	1.3	0.8	1.0	2.64	65
FEKA FXV 20.07 TNA	60202904	460	1.2	0.8	1.0	2.04	50
FEKA FXV 25.07 TNA	60202905	460	1.3	0.8	1.0	2.06	65
FEKA FXV 20.07 TNA	60202912	575	1.2	0.8	1.0	1.6	50
FEKA FXV 25.07 TNA	60202913	575	1.2	0.8	1.0	1.62	65
FEKA FXV 20.11 MNA	60194145	208-240	1.8	1.1	1.5	8.19 - 8.16	50
FEKA FXV 20.11 TNA	60194183	208-220	1.7	1.1	1.5	5.78 - 5.97	50
FEKA FXV 20.11 TNA	60194148	380	1.7	1.1	1.5	3.45	50
FEKA FXV 25.11 MNA	60194155	208-240	1.8	1.1	1.5	8.25 - 8.22	65

FEKA FXV

SUBMERSIBLE PUMPS FOR SEWAGE

TECHNICAL DATA

MODEL	CODE	VOLTAGE 60 Hz	P1 MAX W	P2 NOMINAL		In A	DN mm
				kW	HP		
FEKA FXV 25.11 TNA	60194199	208-220	1.7	1.1	1.5	5.84 - 6.04	65
FEKA FXV 25.11 TNA	60194159	380	1.7	1.1	1.5	3.49	65
FEKA FXV 20.11 TNA	60202906	460	1.6	1.1	1.5	2.67	50
FEKA FXV 25.11 TNA	60202907	460	1.6	1.1	1.5	2.71	65
FEKA FXV 20.11 TNA	60202914	575	1.6	1.1	1.5	2.15	50
FEKA FXV 25.11 TNA	60202915	575	1.6	1.1	1.5	2.15	65
FEKA FXV 25.15 MNA	60194174	208-240	2.6	1.5	2.0	11.99 - 12.24	65
FEKA FXV 25.15 TNA	60194239	208-220	2.4	1.5	2.0	8.23 - 8.59	65
FEKA FXV 25.15 TNA	60194215	380	2.4	1.5	2.0	4.96	65
FEKA FXV 20.15 MNA	60202895	208-240	2.5	1.5	2.0	11.92 - 12.15	50
FEKA FXV 20.15 TNA	60194246	208-220	2.4	1.5	2.0	8.21 - 8.5	50
FEKA FXV 20.15 TNA	60194258	380	2.4	1.5	2.0	4.74 - 4.91	50
FEKA FXV 25.15 TNA	60202908	460	2.4	1.5	2.0	3.81	65
FEKA FXV 20.15 TNA	60202909	460	2.4	1.5	2.0	3.81	50
FEKA FXV 25.15 TNA	60202916	575	2.3	1.5	2.0	2.94	65
FEKA FXV 20.15 TNA	60202917	575	2.3	1.5	2.0	2.93	50
FEKA FXV 20.22 MNA	60202897	208-240	3.0	2.2	3.0	13.95 - 13.69	50
FEKA FXV 25.22 MNA	60202899	208-240	2.9	2.2	3.0	13.65 - 13.61	65
FEKA FXV 20.22 TNA	60202900	380	2.8	2.2	3.0	5.47	50
FEKA FXV 20.22 TNA	60202901	208-220	2.8	2.2	3.0	9.32 - 9.47	50
FEKA FXV 25.22 TNA	60202902	208-220	2.8	2.2	3.0	9.23 - 9.59	65
FEKA FXV 25.22 TNA	60202903	380	2.8	2.2	3.0	5.54	65
FEKA FXV 20.22 TNA	60202910	460	2.8	2.2	3.0	4.34	50
FEKA FXV 25.22 TNA	60202911	460	2.9	2.2	3.0	4.38	65
FEKA FXV 20.22 TNA	60202918	575	2.7	2.2	3.0	3.31	50
FEKA FXV 25.22 TNA	60202919	575	2.7	2.2	3.0	3.36	65

DAB PUMPS reserves the right to make modifications without notice

FEKA FXV

SUBMERSIBLE PUMPS FOR SEWAGE

RANGE PERFORMANCE

FEKA FXV 20

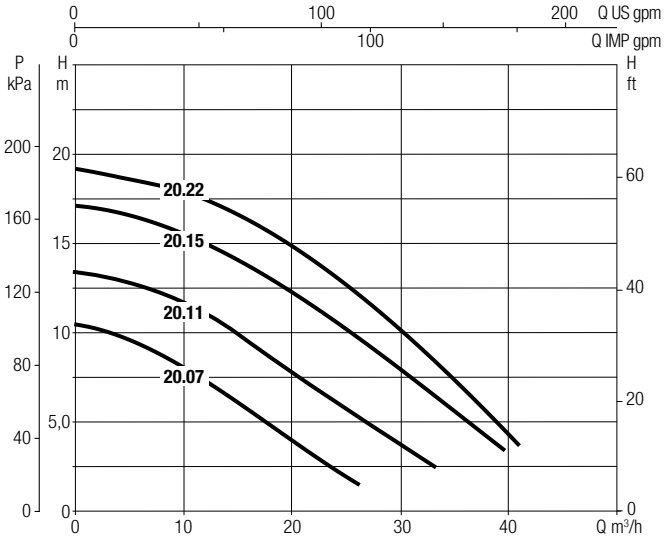

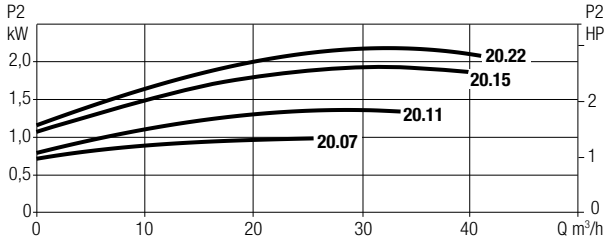

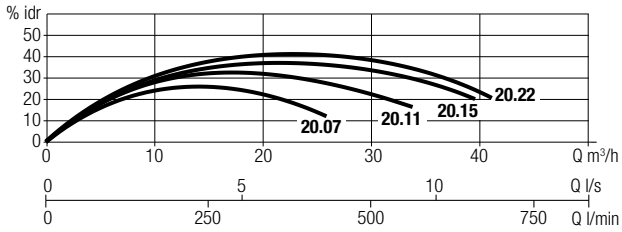

FEKA FXV 25

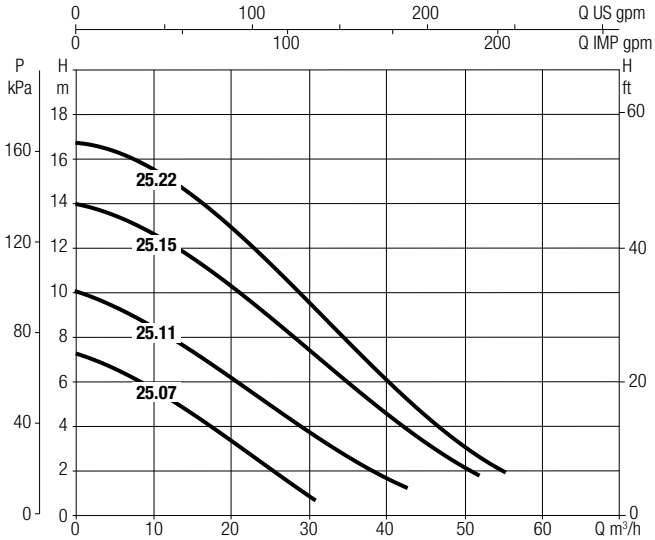

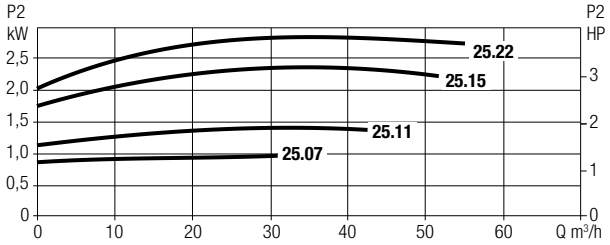

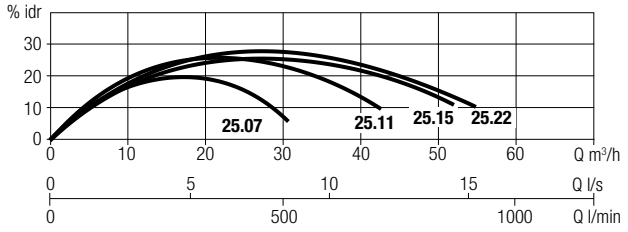

FEKA FXV

SUBMERSIBLE PUMPS FOR SEWAGE

DIMENSIONS AND WEIGHT

FEKA FXV 20

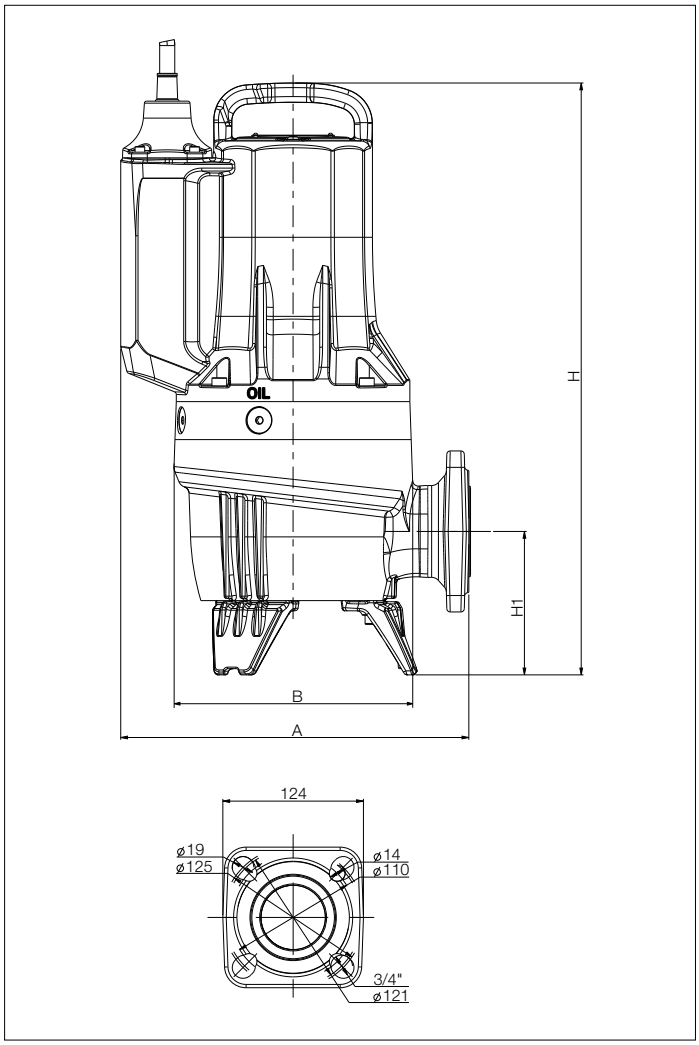

FEKA FXV 25

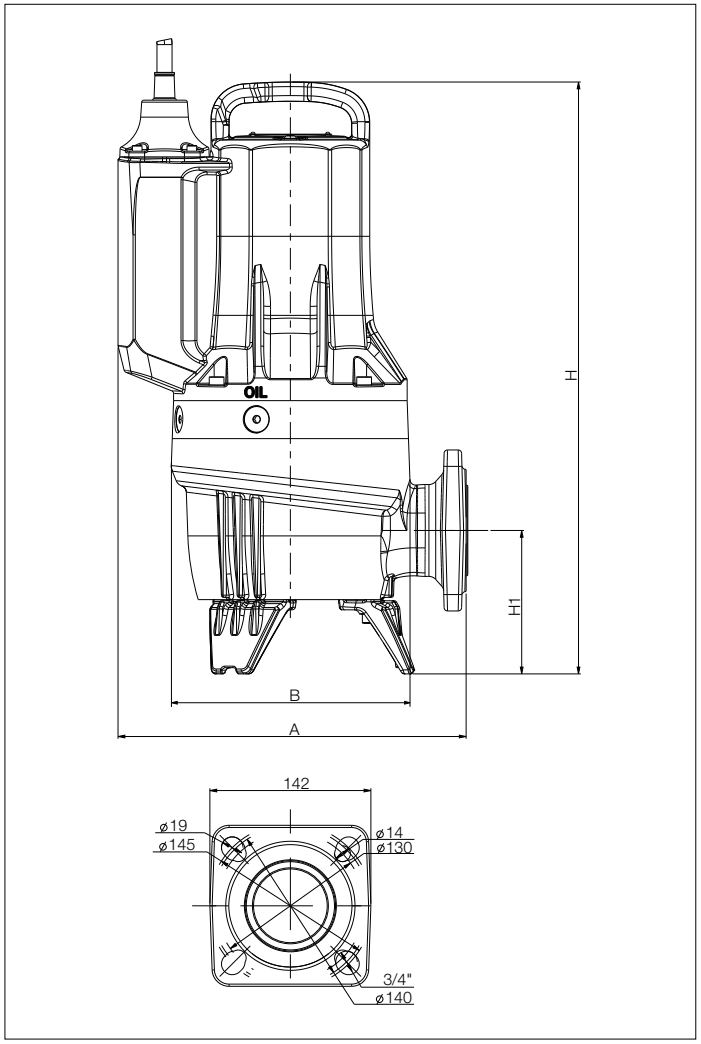

MODEL	units	FREE PASSAGE	A	B	H		H1	DELIVERY				PACKING DIMENSIONS			CABLE LENGHT	WEIGHT
						Ex		NPT	DN1	HOLES	D	L/A	L/B	H		
FEKA FXV 20.07	inch	2	12.1	8.3	18.3	18.3	4.1	Rp 2"	50 PN10/6	4	125-110	26	14.6	15.7	33 ft	77.2 lbs
	mm	50	307	211	464	464	104					660	370	400	10 m	35 Kg
FEKA FXV 20.11	inch	2	12.1	8.3	18.3	19	4.1	Rp 2"	50 PN10/6	4	125-110	26	14.6	15.7	33 ft	77.2 lbs
	mm	50	307	211	464	482	104					660	370	400	10 m	35 Kg
FEKA FXV 20.15 MA	inch	2	12.1	8.3	18.3	-	4.1	Rp 2"	50 PN10/6	4	125-110	26	14.6	15.7	33 ft	86 lbs
	mm	50	307	211	464	-	104					660	370	400	10 m	39 Kg
FEKA FXV 20.15 MNA-TNA	inch	2	12.1	8.3	18.7	19.4	4.1	Rp 2"	50 PN10/6	4	125-110	26	14.6	15.7	33 ft	86 lbs
	mm	50	307	211	474	492	104					660	370	400	10 m	39 Kg
FEKA FXV 20.22	inch	2	12.1	8.3	19.4	20	4.1	Rp 2"	50 PN10/6	4	125-110	26	14.6	15.7	33 ft	88.2 lbs
	mm	50	307	211	492	508	104					660	370	400	10 m	40 Kg
FEKA FXV 25.07	inch	2.6	12.1	8.3	19.8	20.4	4.9	-	65 PN10/6	4	145-130	26	14.6	15.7	33 ft	79.4 lbs
	mm	65	307	211	502	519	124					660	370	400	10 m	36 Kg
FEKA FXV 25.11	inch	2.6	12.1	8.3	19.8	20.4	4.9	-	65 PN10/6	4	145-130	26	14.6	15.7	33 ft	81.6 lbs
	mm	65	307	211	502	519	124					660	370	400	10 m	37 Kg
FEKA FXV 25.15	inch	2.6	12.1	8.3	20.6	21.2	5	-	65 PN10/6	4	145-130	26	14.6	15.7	33 ft	94.8 lbs
	mm	65	307	211	522	539	127					660	370	400	10 m	43 Kg
FEKA FXV 25.22	inch	2.6	12.1	8.3	20.6	21.2	5	-	65 PN10/6	4	145-130	26	14.6	15.7	33 ft	90.4 lbs
	mm	65	307	211	522	539	127					660	370	400	10 m	41 Kg
FEKA FXV 25.07.4	inch	2.6	13.2	10	21.5	21.5	5.2	-	65 PN10/6	4	145-130	26	14.6	15.7	33 ft	99.2 lbs
	mm	65	335	253	545	545	132					660	370	400	10 m	45 Kg
FEKA FXV 25.22.4	inch	2.6	13.2	10	21.5	21.5	5.2	-	65 PN10/6	4	145-130	26	14.6	15.7	33 ft	105.8 lbs
	mm	65	335	253	545	545	132					660	370	400	10 m	48 Kg

DAB PUMPS reserves the right to make modifications without notice

NOTES

ACCESSORIES SUMP & SEWAGE

PUMPING STATIONS ACCESSORIES

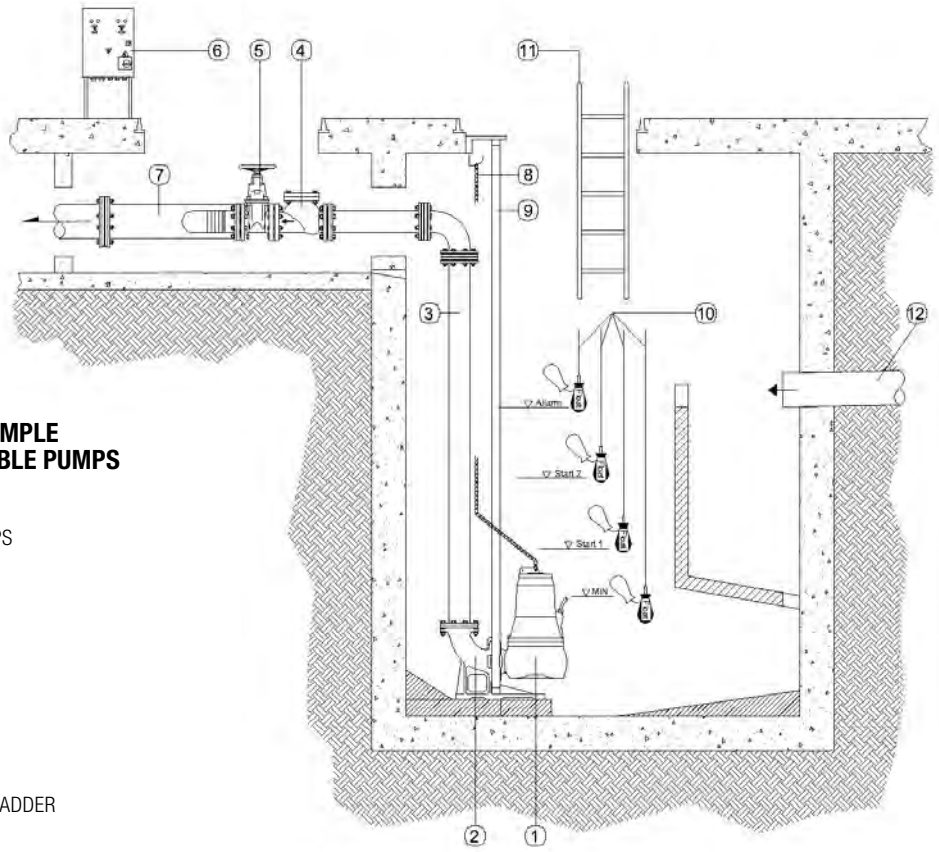

INSTALLATION EXAMPLE OF TWO SUBMERSIBLE PUMPS

KEY:

1 SUBMERSIBLE PUMPS
2 BASE ELBOW
3 DISCHARGE PIPE
4 BALL CHECK VALVE
5 GATE VALVE
6 CONTROL PANEL
7 MANIFOLD
8 LIFTING CHAIN
9 GUIDE RAILS
10 FLOAT SWITCHES
11 SUMP INSPECTION LADDER
12 INLET PIPE

FLOATS	NOVA / FEKA DRENAG	FEKA VS	FX	DESCRIPTION		CODE
	•	•	•	**FLOAT SWITCH**	**16 ft (5 m)**	159260030
					33 ft (10 m)	159260040
					49 ft (15 m)	159260050
					66 ft (20 m)	159260070
			•	**FLOAT SWITCH - ATEX**	**33 ft (10 m)**	60119025
		•	•	**BULB-FLOAT SWITCH**	**33 ft (10 m)**	002718000
					66 ft (20 m)	002718001
	•	•	•	**FLOAT SWICH COUNTERWEIGHT - 0.7 lbs (300 gr.)**		002910501
		•		**FLOAT CABLE STOP KIT FOR FEKA VS**		147121370

PUMPING STATIONS ACCESSORIES

LIFTING DEVICES	NOVA / FEKA / DRENAG	FEKA VS	FX	DESCRIPTION	CODE
		•		**DSD2 - DAB FEKA 550->1200 NPT**	60204318
		•		**ANTIROTATION BRACKET FOR FEKA VS**	147121490

GUIDE TUBES NOT INCLUDED

COUPLING UNIT	NOVA / FEKA / DRENAG	FEKA VS	FX	DESCRIPTION	CODE
			•	**DA-050 HORIZONTAL COUPLING UNIT DN32 DN40 DN50**	60195865
			•	**DA-065 HORIZONTAL COUPLING UNIT DN65**	60170310
			•	**DA-V65 COUPLING UNIT DN65**	60167993

CHAIN KITS	NOVA / FEKA / DRENAG	FEKA VS	FX	DESCRIPTION	CODE
	•	•	•	**KIT CHAIN W/SHACKLE 10 FT A316 MAX 330.7 lbs (150 Kg)**	60171183
				KIT CHAIN W/SHACKLE 10 FT A316 MAX 771.6 lbs (350 Kg)	60178908
				KIT CHAIN W/SHACKLE 10 FT A316 MAX 1543.2 lbs (700 Kg)	60171189

PUMPING STATIONS ACCESSORIES

ADAPTERS	NOVA / FEKA DRENAG	FEKA VS	FX	DESCRIPTION	CODE
			•	**COUPLING SYSTEM ADAPTOR FX GRINDER – FEKA DN32 DN40 DN50**	60196199
			•	**COUPLING SYSTEM ADAPTOR FX - FLYGT DN50**	60196203
			•	**KIT ELBOW 90° 2" NPT FX**	60204319
			•	**KIT ELBOW 90° 1"1/2 NPT FX**	60204320

KIT FLANGE	NOVA / FEKA DRENAG	FEKA VS	FX	DESCRIPTION	CODE
			•	**KIT FLANGE DN 65 PN16 UNI 2254**	60172458

BALL NON-RETURN VALVES	NOVA / FEKA DRENAG	FEKA VS	FX	DESCRIPTION	CODE
		•	•	**DN50 NON RETURN VALVE (BALL)**	60160629
		•	•	**DN65 NON RETURN VALVE (BALL)**	60160630

PUMPING STATIONS ACCESSORIES

GATE VALVES	NOVA / FEKA DRENAG	FEKA VS	FX	DESCRIPTION	CODE
		•	•	**GATE VALVE FLANGED DN 50**	60163811
		•	•	**GATE VALVE FLANGED DN 65**	60163812

ALARMS AND CONTROL	NOVA / FEKA DRENAG	FEKA VS	FX	DESCRIPTION	CODE
	•	•	•	**AS 1 CONTROL WITH ALARM DEVICE**	108310000
	•	•	•	**AUDIBLE ALARM - 230 V - 60HZ**	002789002
				AUDIBLE ALARM - 24 V - 60 HZ	002789000
	•	•	•	**FLASHING 230V 5W 50/60 HZ**	60169271

TRASDUCERS	NOVA / FEKA DRENAG	FEKA VS	FX	DESCRIPTION	CODE
	•	•	•	**PRESSURE TRASDUCER 0-16 ft (0 - 5 m) CABLE 66 ft (20 m) FOR EBOX**	60114675

NOTES

INDEX - HVAC



EVOSTA 2 - EVOSTA 2D - EVOSTA 2 55 SAN
WET ROTOR ELECTRONIC CIRCULATORS

PAGE 156



EVOPLUS SMALL
ELECTRONIC CIRCULATORS FOR SMALL COMMUNITY HEATING

PAGE 158



EVOPLUS
CIRCULATORS FOR HEATING AND AIR-CONDITIONING SYSTEMS

PAGE 167

ACCESSORIES

PAGE 195

EVOSTA 2

ELECTRONIC CIRCULATORS FOR DOMESTIC HEATING SYSTEMS - SINGLE, WITH UNIONS



EVOSTA 2

Evosta 2 by DAB is a wet rotor electronic circulator designed for the recirculation of water in domestic and residential heating and air conditioning systems.
Evosta 2 has a permanent magnet synchronous motor and inverter electronics that automatically adapt performance to system requirements, ensuring energy savings and protection from hammering effects.
With its compact size and all-round performance, it's the perfect replacement of old three-speed circulators. It combines the strength of the mechanical circulator with the benefits of the electronic one. Its configuration is very simple: a sequential button can be used to scroll through the nine operating modes, three with proportional pressure, three with constant pressure and three with constant speed. All the models have a breather plug and allow manual release of the motor shaft. Threaded suction and delivery ports. Technopolymer impeller. Cataphoretic paint coated cast iron body, stainless steel motor casing. Water resistant electronics with IPX5 protection class.

Operating range
0.8 - 15.1 gpm (0.2 - 3.4 m³/h) with head up to 18 ft (5 m)

Pumped liquid temperature range
from +14 °F to +230 °F (-10°C to + 110°C)

Working pressure 145 psi (10 bar)

Protection class: IP X5. (NEMA 4X) Protected against jets of water

Insulation class F

Installation with horizontal motor axis

Standard power input
single-phase 1 x 110-127 V~ 60 Hz

Pumped liquid clean, free of solids and mineral oils, non-viscous, chemically neutral, with properties similar to water (glycol max 30%)

PUMP BODY Pump body in cast iron with cataphoresis treatment EVOSTA2 SAN version with Stainless Steel

TECHNICAL DATA

MODEL	CODE	CENTRE DISTANCE	FLANGE	POWER INPUT 60 Hz	P1 MAX W	In A	EEI	MINIMUM SUCTION PRESSURE		
								t°	194 °F	90°C
EVOSTA 2 55 110-127V 60HZ	60192406	6 3/8" (162 mm)	OVAL 2 BOLT	1 x 110-127 V ~	4 41	0.064 0.61	EEI ≤ 0.23	c.w.	32.8ft	10m
EVOSTA 2D 55 110-127V 60HZ	60192407	6 3/8" (162 mm)	OVAL 2 BOLT	1 x 110-127 V ~	4 41	0.064 0.61	EEI ≤ 0.23	c.w.	32.8ft	10m
EVOSTA 2 55 SAN 110-127V 60HZ	60193156	6 3/8" (162 mm)	OVAL 2 BOLT	1 x 110-127 V ~	4 41	0.064 0.61	EEI ≤ 0.23	c.w.	32.8ft	10m

RANGE PERFORMANCE

MODEL	HYDRAULIC DATA									
	Q=GPM	0	2	4	6	8	10	12	14	15.12
	Q=m³/h	0	0.5	0.9	1.4	1.8	2.3	2.7	3.2	3.4
EVOSTA 2 RANGE	H (ft)	17.92	17.85	17.81	14.38	11.98	9.42	7.01	4.79	3.34
	H (m)	5.5	5.4	5.4	4.4	3.7	2.9	2.1	1.5	1

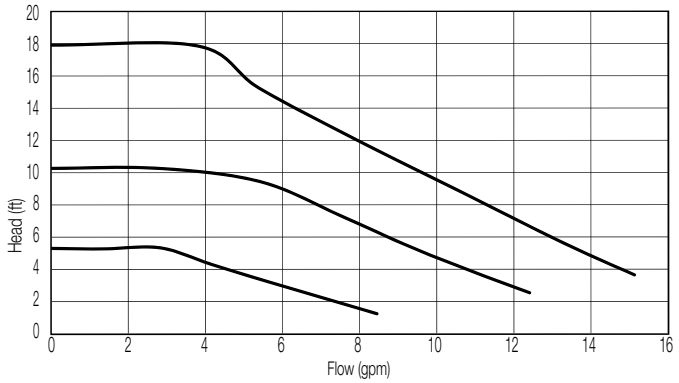

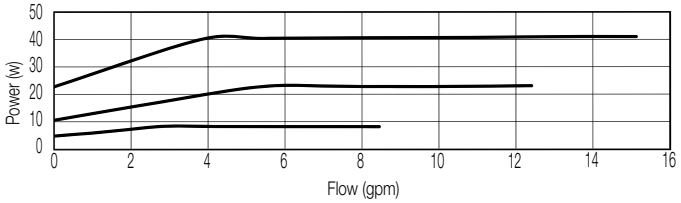

CONSTANT SPEED

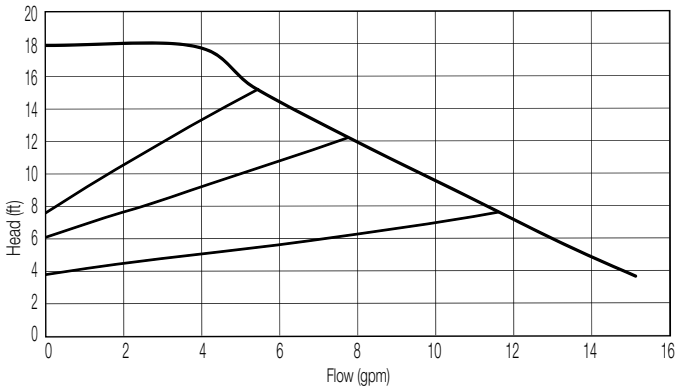

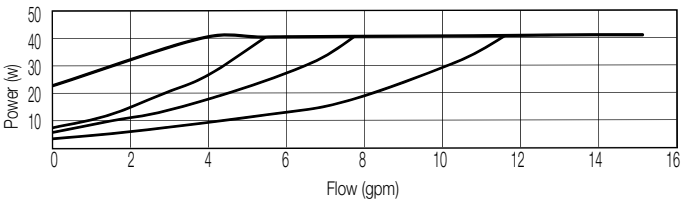

PROPORTIONAL PRESSURE

EVOSTA 2

ELECTRONIC CIRCULATORS FOR DOMESTIC HEATING SYSTEMS - SINGLE, WITH UNIONS

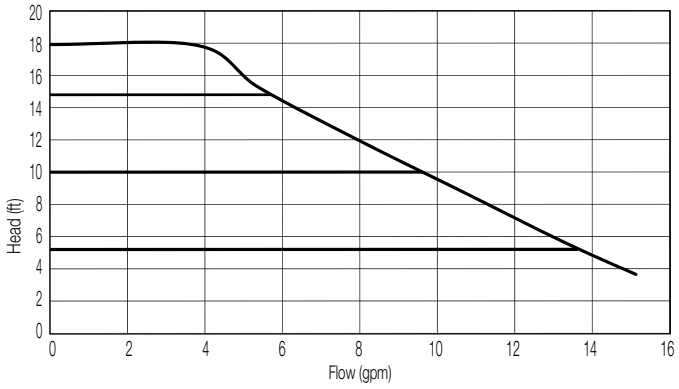

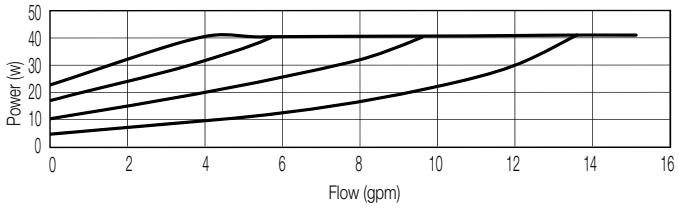

CONSTANT PRESSURE

Curve tolerance according to ISO 9906.

DIMENSIONS

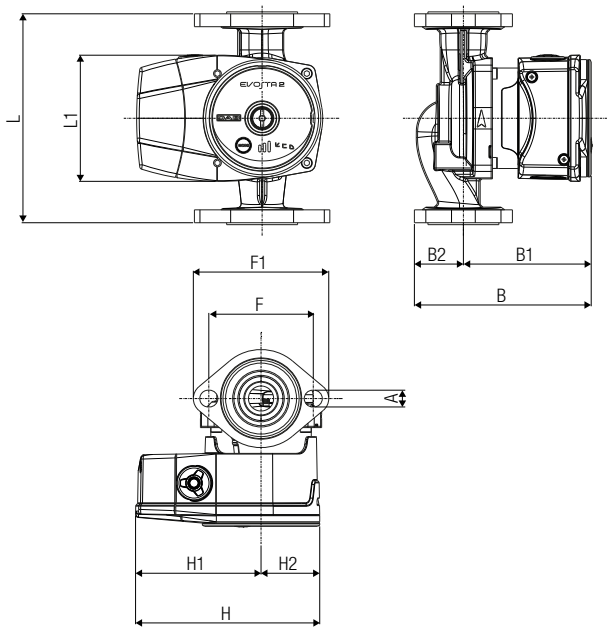

DIMENSIONS AND WEIGHTS

MODEL	units	L	L1	B	B1	B2	H	H1	H2	A	F	F1	PACKING DIMENSIONS			VOLUME	WEIGHT
													L	B	H		
EVOSTA 2 RANGE	inch	6 3/8"	5 55/64"	5 25/64"	3 57/64"	1 1/2"	5 5/8"	3 13/16"	1 13/64"	33/64"	3 3/16"	4 9/64"	5 23/64"	7 1/4"	6 17/32"	0.1467 ft³	5.37 lbs
	mm	162	150	137	99	38	143	97	30.5	13	81	105	136	184	166	0.0042 m³	2.4 Kg

EVOPLUS SMALL

ELECTRONIC CIRCULATORS FOR SMALL COMMUNITY HEATING



EVOPLUS SMALL electronic circulators can be used in heating, ventilation and air conditioning systems for residential and commercial buildings. In all correctly sized installations, the electronically controlled wet rotor pumps constantly ensure sufficient power and, simultaneously, lower noise emissions, greater comfort and a significant reduction in running costs. All models fitted with flanged pump body are available in both single and the twin versions. The user interface is easy to use and easy to understand.

Circulator protection rate IP 44

Insulation class F

Standard voltage
single-phase 220/240V, 50/60Hz

In accordance with European standards
EN 61800-3 - EN 60335-1 - EN 60335-2-51

Operating range
from 8.8 to 52.8 gpm (2 to 12 m3/h) with head up to 36 ft (11 m)

Liquid Temperature range from 14 F to 230 F (-10 °C to 110 °C)

Pumped liquid clean, free from solids and mineral oils, not viscous, chemically neutral, close to the properties of water (max. glycol contents 30%)

Maximum working pressure 232 psi (16 bar)

Standard flanging the single version is available with 1 1/2" and 2" threaded ports and with flanged ports DN 32 and DN 40, PN 6 / PN 10 / PN 16
The twin version is available with flanged pump body DN 32 and DN 40, PN 6 / PN 10 / PN 16

Installation with horizontal motor shaft

ErP ready

C SA US *PENDING APPROVAL*

D+ CONNECT PAG. 5

ACCESSORIES PAG. 195

TECHNICAL DATA - *SINGLE WITH FLANGES*

	MODEL	CODE	CENTRE DISTANCE inch	CENTRE DISTANCE mm	COUNTERFLANG. ON REQUEST	ELECTRICAL DATA VOLTAGE 50/60 Hz	ELECTRICAL DATA P1 MAX W	ELECTRICAL DATA In A	EEI PART 2
DN 32	EVOPLUS B 40/220.32 M	60150946	8.7	220	DN32 PN 6	220/240 V	68	0.55	EEI ≤ 0.20
DN 32	EVOPLUS B 60/220.32 M	60150947	8.7	220	DN32 PN 6	220/240 V	100	0.75	EEI ≤ 0.20
DN 32	EVOPLUS B 80/220.32 M	60150948	8.7	220	DN32 PN 6	220/240 V	132	0.97	EEI ≤ 0.20
DN 32	EVOPLUS B 110/220.32 M	60150949	8.7	220	DN32 PN 6	220/240 V	180	1.3	EEI ≤ 0.20
DN 40	EVOPLUS B 40/250.40 M	60150950	9.8	250	DN40 PN 10	220/240 V	70	0.55	EEI ≤ 0.20
DN 40	EVOPLUS B 60/250.40 M	60150951	9.8	250	DN40 PN 10	220/240 V	100	0.75	EEI ≤ 0.20
DN 40	EVOPLUS B 80/250.40 M	60150952	9.8	250	DN40 PN 10	220/240 V	132	0.97	EEI ≤ 0.20
DN 40	EVOPLUS B 110/250.40 M	60150953	9.8	250	DN40 PN 10	220/240 V	180	1.3	EEI ≤ 0.20

TECHNICAL DATA - *TWIN FLANGED*

	MODEL	CODE	CENTRE DISTANCE inch	CENTRE DISTANCE mm	COUNTERFLANG. ON REQUEST	ELECTRICAL DATA VOLTAGE 50/60 Hz	ELECTRICAL DATA P1 MAX W	ELECTRICAL DATA In A	EEI PART 2
DN 32	EVOPLUS D 40/220.32 M	60150954	8.7	220	DN32 PN 6	220/240 V	70	0.55	EEI ≤ 0.23
DN 32	EVOPLUS D 60/220.32 M	60150955	8.7	220	DN32 PN 6	220/240 V	95	0.75	EEI ≤ 0.23
DN 32	EVOPLUS D 80/220.32 M	60150956	8.7	220	DN32 PN 6	220/240 V	130	0.95	EEI ≤ 0.23
DN 32	EVOPLUS D 110/220.32 M	60150957	8.7	220	DN32 PN 6	220/240 V	190	1.3	EEI ≤ 0.23
DN 40	EVOPLUS D 40/250.40 M	60150958	9.8	250	DN40 PN 10	220/240 V	75	0.55	EEI ≤ 0.22
DN 40	EVOPLUS D 60/250.40 M	60150959	9.8	250	DN40 PN 10	220/240 V	100	0.75	EEI ≤ 0.22
DN 40	EVOPLUS D 80/250.40 M	60150960	9.8	250	DN40 PN 10	220/240 V	135	0.95	EEI ≤ 0.22
DN 40	EVOPLUS D 110/250.40 M	60150961	9.8	250	DN40 PN 10	220/240 V	190	1.3	EEI ≤ 0.22

EVOPLUS SMALL

ELECTRONIC CIRCULATORS FOR SMALL COMMUNITY HEATING

RANGE PERFORMANCE

MODEL	HYDRAULIC DATA							
	Q=GPM	0	10.6	13.2	18.5	23.8	31.7	42.2
	Q=l/min	0	40	50	70	90	120	160
EVOPLUS B 40/220.32 M	H (ft)	14	14	14	11	8	4	
	H (m)	4.2	4.2	4.2	3.3	2.5	1.3	
EVOPLUS B 60/220.32 M	H (ft)	20	20	18	15	12	7	
	H (m)	6.1	6.1	5.6	4.6	3.6	2.2	
EVOPLUS B 80/220.32 M	H (ft)	26	26	24	20	16	11	
	H (m)	8	8	7,3	6	4,9	3,3	
EVOPLUS B 110/220.32 M	H (ft)	37	34	31	27	22	16	9
	H (m)	11.2	10.5	9.6	8.1	6.8	5	2.6
EVOPLUS B 40/250.40 M	H (ft)	14	14	14	11	8	4	
	H (m)	4.2	4.2	4.2	3.3	2.5	1.3	
EVOPLUS B 60/250.40 M	H (ft)	20	20	18	15	12	7	
	H (m)	6.1	6.1	5.6	4.6	3.6	2.2	
EVOPLUS B 80/250.40 M	H (ft)	26	26	24	20	16	11	
	H (m)	8	8	7,3	6	4,9	3,3	
EVOPLUS B 110/250.40 M	H (ft)	37	34	31	27	22	16	9
	H (m)	11.2	10.5	9.6	8.1	6.8	5	2.6
EVOPLUS D 40/220.32 M	H (ft)	14	14	14	11	8	4	
	H (m)	4.2	4.2	4.2	3.3	2.5	1.3	
EVOPLUS D 60/220.32 M	H (ft)	20	20	18	15	12	7	
	H (m)	6.1	6.1	5.6	4.6	3.6	2.2	
EVOPLUS D 80/220.32 M	H (ft)	26	26	24	20	16	11	
	H (m)	8	8	7.3	6	4.9	3.3	
EVOPLUS D 110/220.32 M	H (ft)	37	34	31	27	22	16	9
	H (m)	11.2	10.5	9.6	8.1	6.8	5	2,6
EVOPLUS D 40/250.40 M	H (ft)	14	14	14	11	8	4	
	H (m)	4.2	4.2	4.2	3.3	2.5	1.3	
EVOPLUS D 60/250.40 M	H (ft)	20	20	18	15	12	7	
	H (m)	6.1	6.1	5.6	4.6	3.6	2.2	
EVOPLUS D 80/250.40 M	H (ft)	26	26	24	20	16	11	
	H (m)	8	8	7.3	6	4.9	3.3	
EVOPLUS D 110/250.40 M	H (ft)	37	34	31	27	22	16	9
	H (m)	11.2	10.5	9.6	8.1	6.8	5	2.6

DAB PUMPS reserves the right to make modifications without notice

EVOPLUS SMALL

ELECTRONIC CIRCULATORS FOR SMALL COMMUNITY HEATING

EVOPLUS B 40/220.32 M

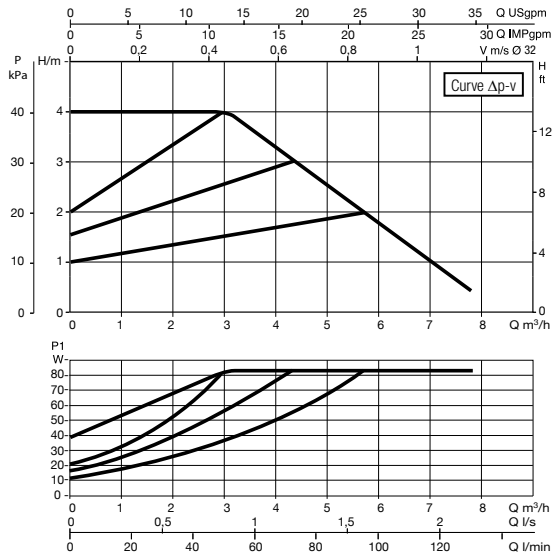

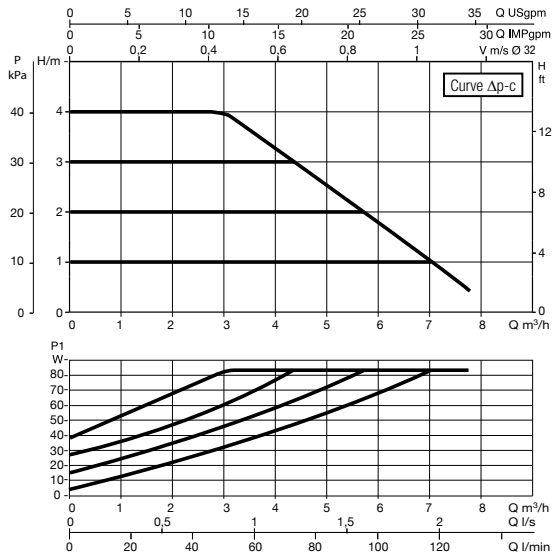

EVOPLUS B 60/220.32 M

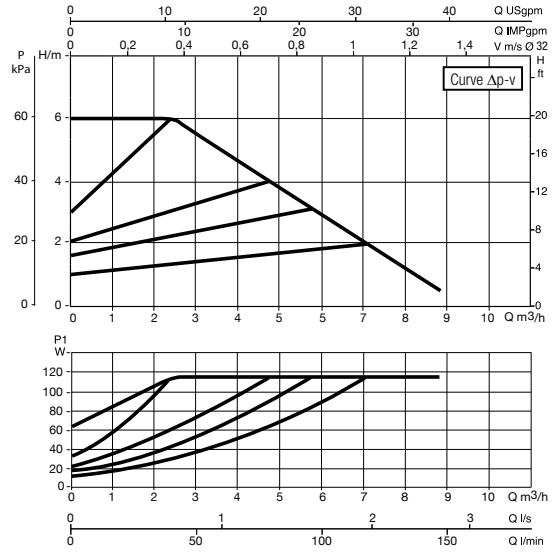

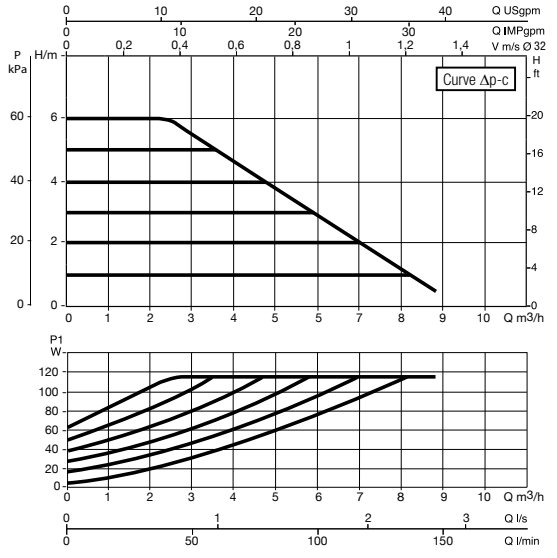

EVOPLUS B 80/220.32 M

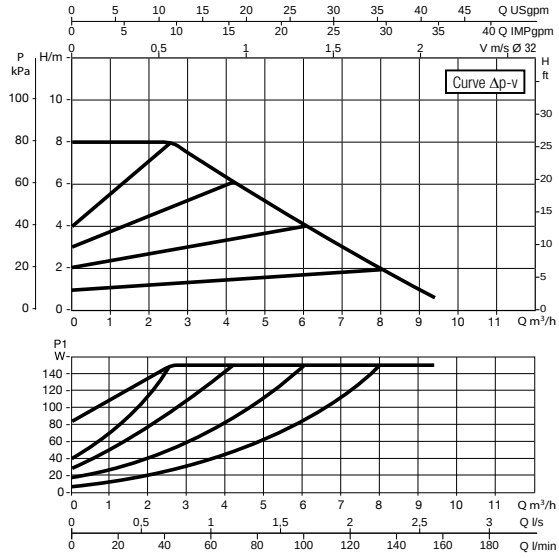

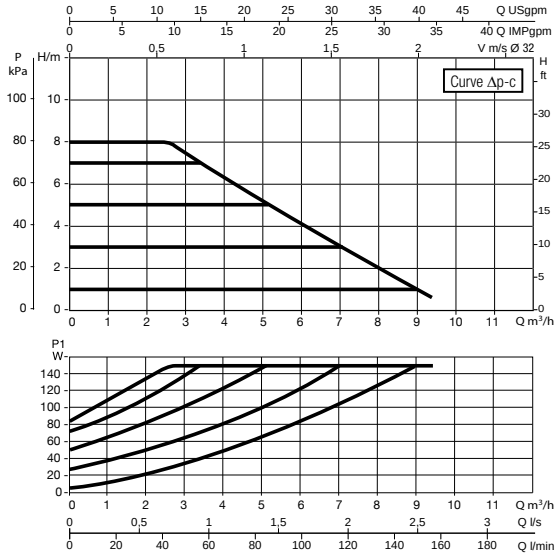

Curve tolerance according to ISO 9906.

EVOPLUS SMALL

ELECTRONIC CIRCULATORS FOR SMALL COMMUNITY HEATING

EVOPLUS B 110/220.32 M

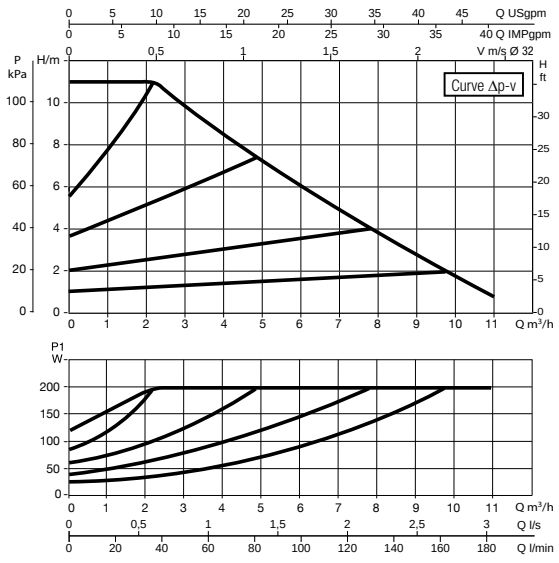

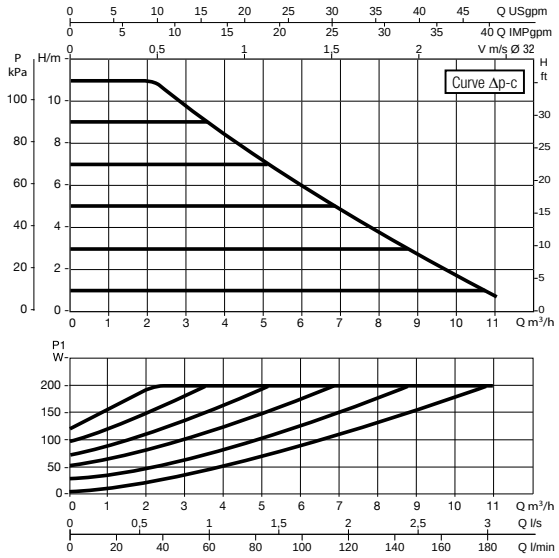

EVOPLUS B 40/250.40 M

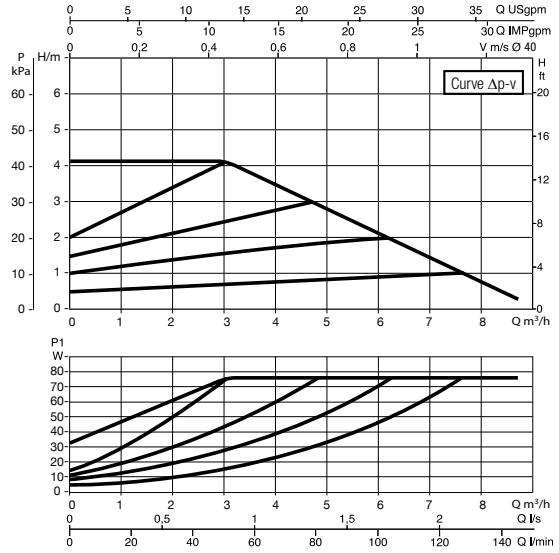

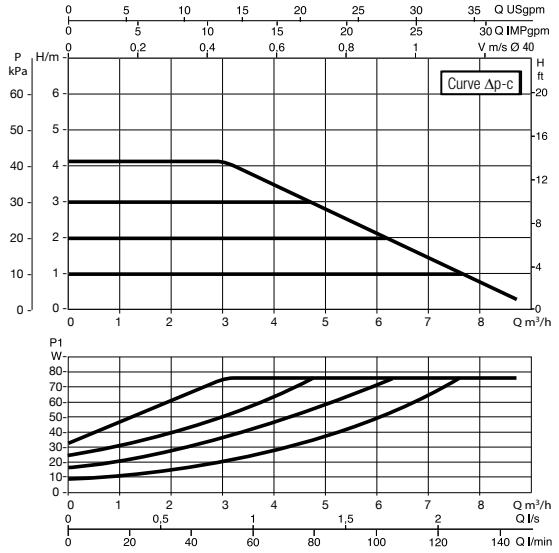

EVOPLUS B 60/250.40 M

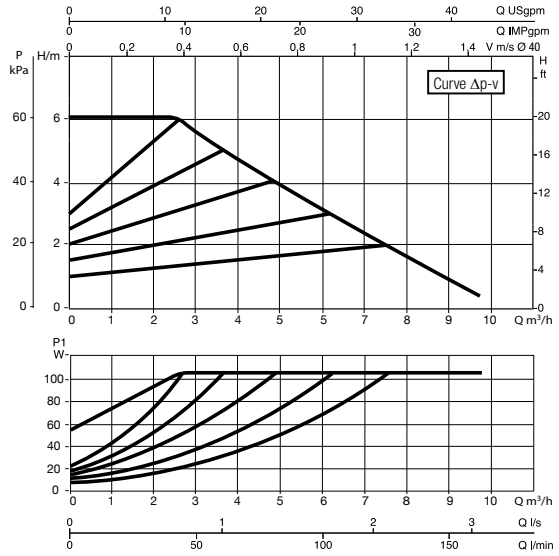

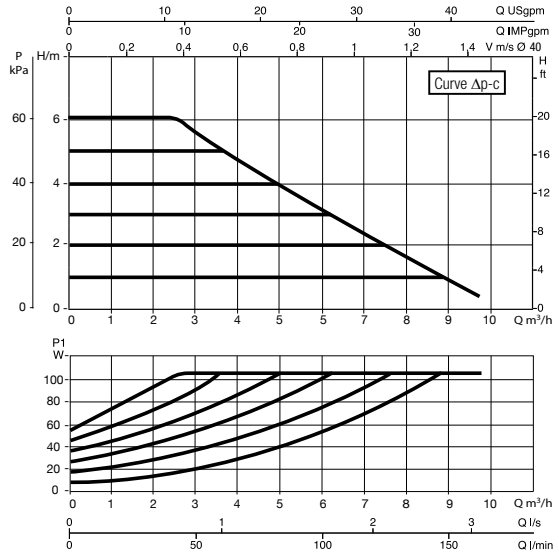

Curve tolerance according to ISO 9906.

DAB PUMPS reserves the right to make modifications without notice

EVOPLUS SMALL

ELECTRONIC CIRCULATORS FOR SMALL COMMUNITY HEATING

EVOPLUS B 80/250.40 M

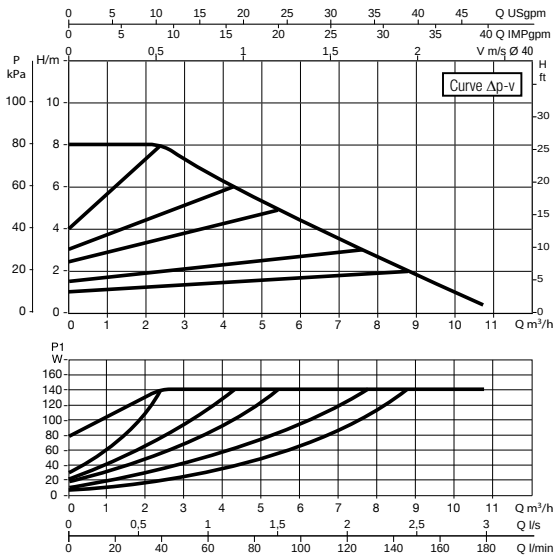

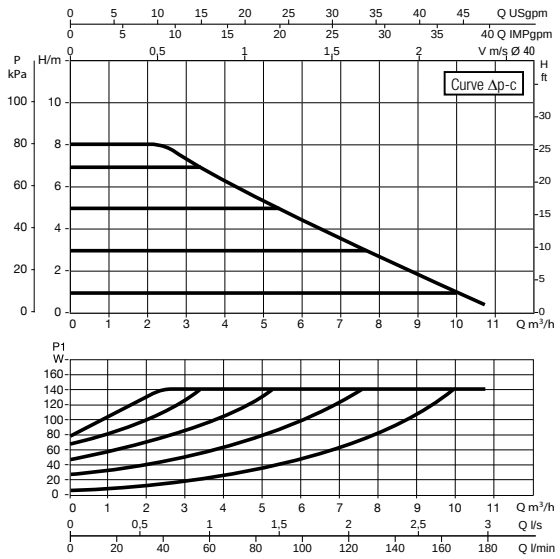

EVOPLUS B 110/250.40 M

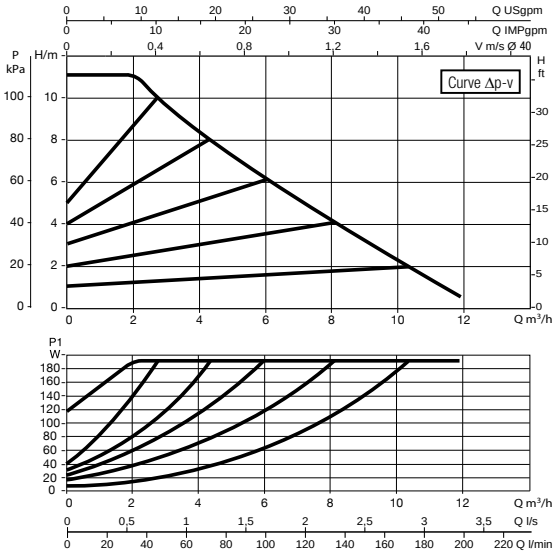

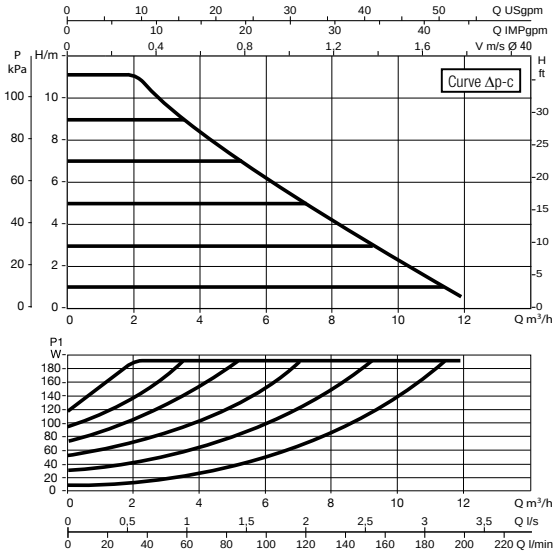

EVOPLUS D 40/220.32 M

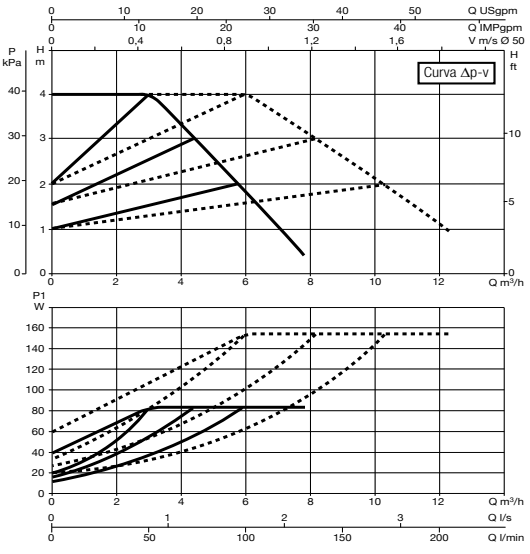

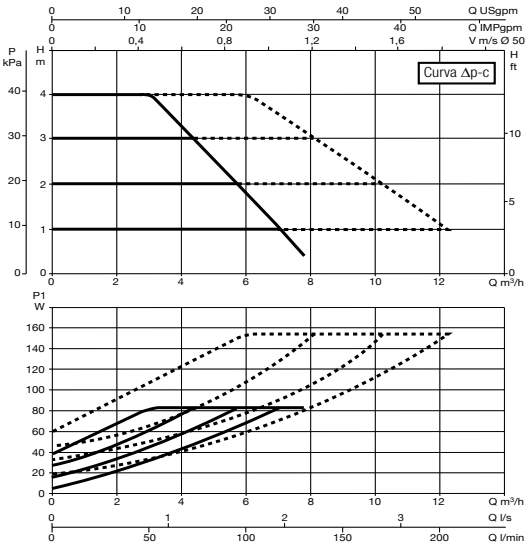

Curve tolerance according to ISO 9906.

EVOPLUS SMALL

ELECTRONIC CIRCULATORS FOR SMALL COMMUNITY HEATING

EVOPLUS D 60/220.32 M

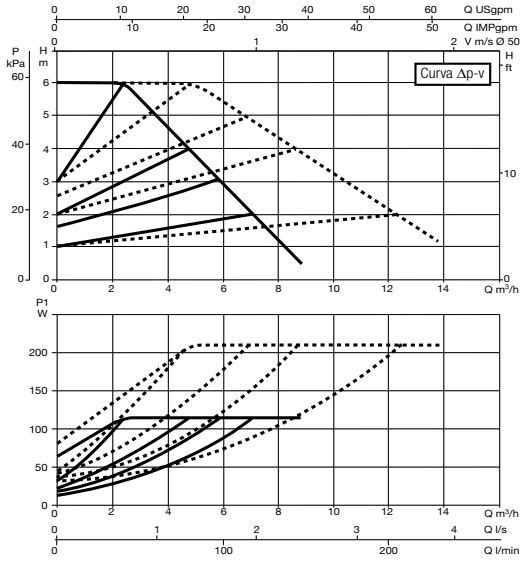

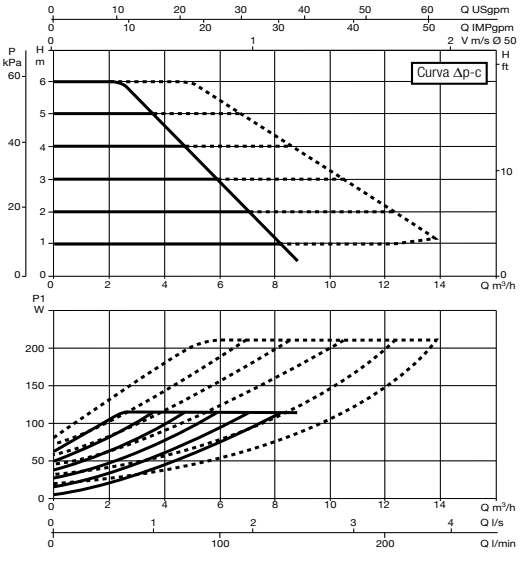

EVOPLUS D 80/220.32 M

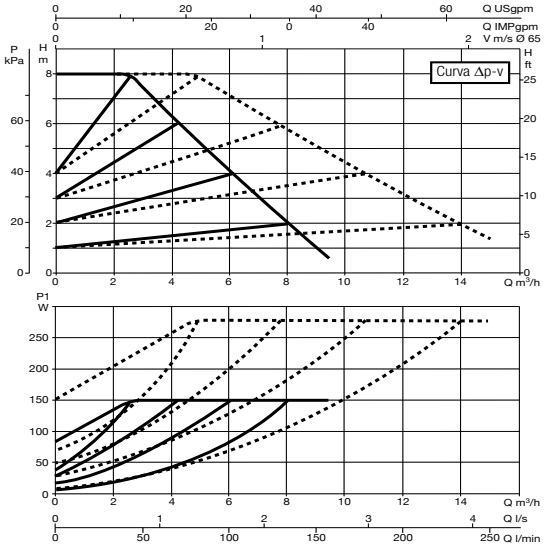

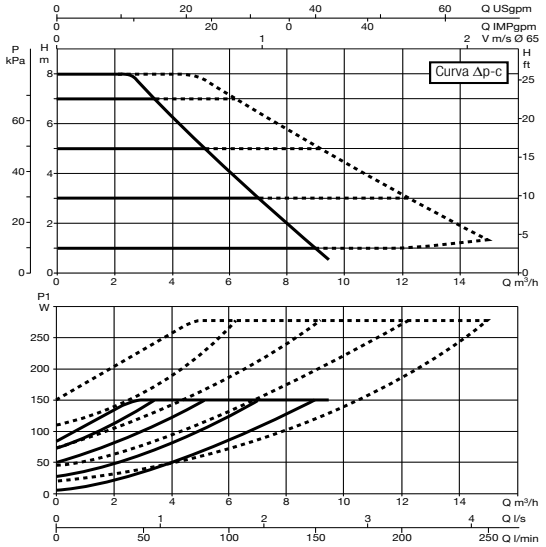

EVOPLUS D110/220.32 M

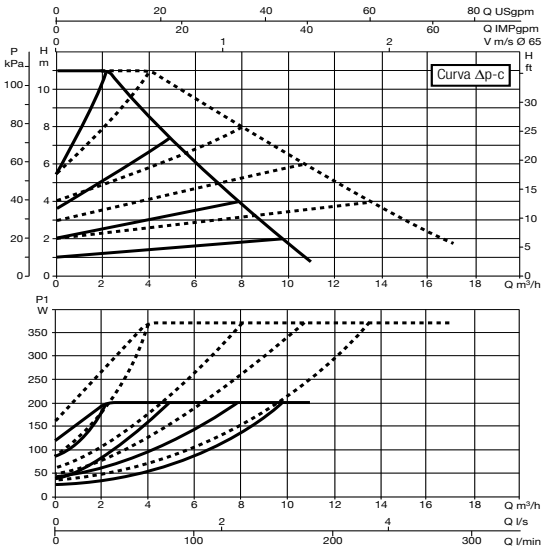

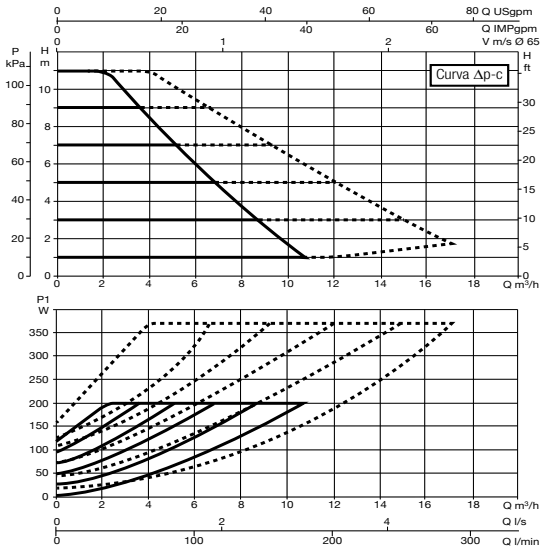

Curve tolerance according to ISO 9906.

EVOPLUS SMALL

ELECTRONIC CIRCULATORS FOR SMALL COMMUNITY HEATING

EVOPLUS D 40/250.40 M

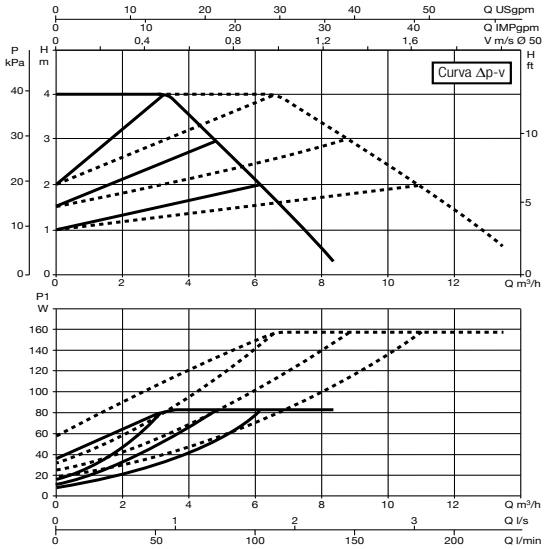

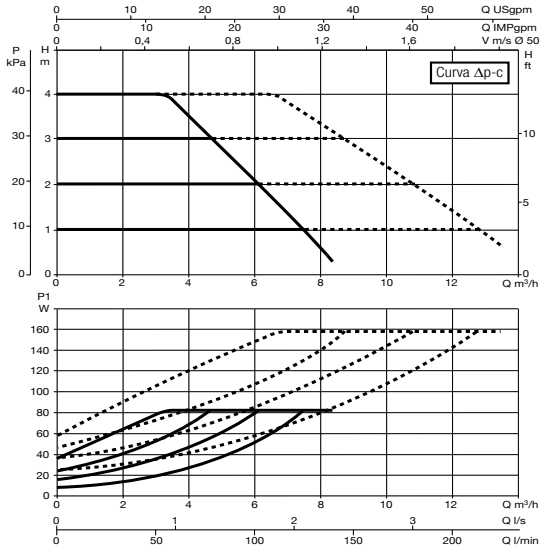

EVOPLUS D 60/250.40 M

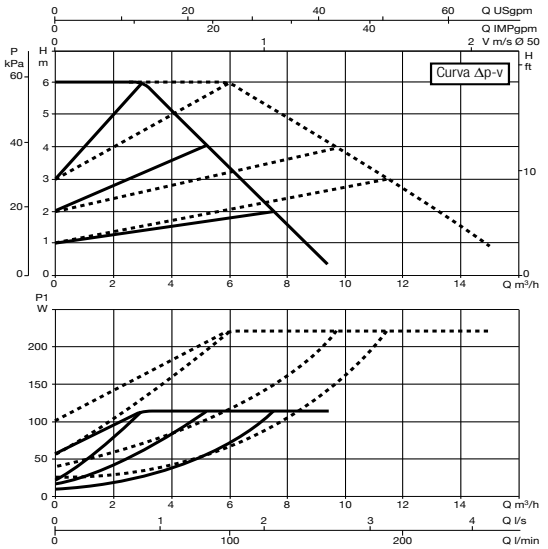

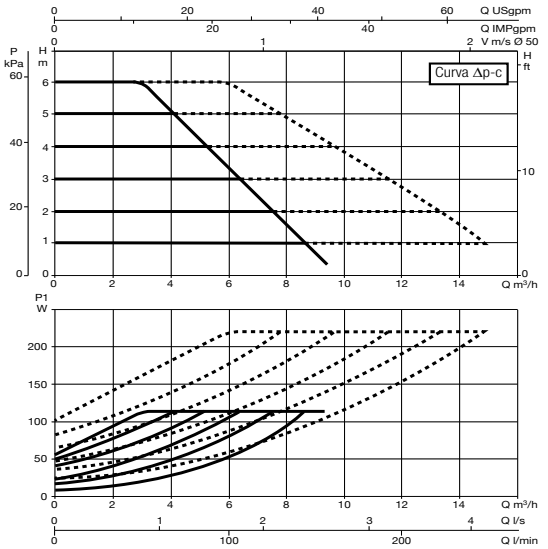

EVOPLUS D 80/250.40 M

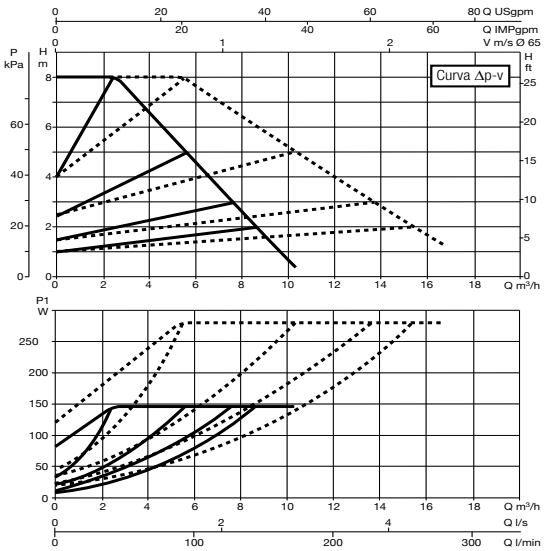

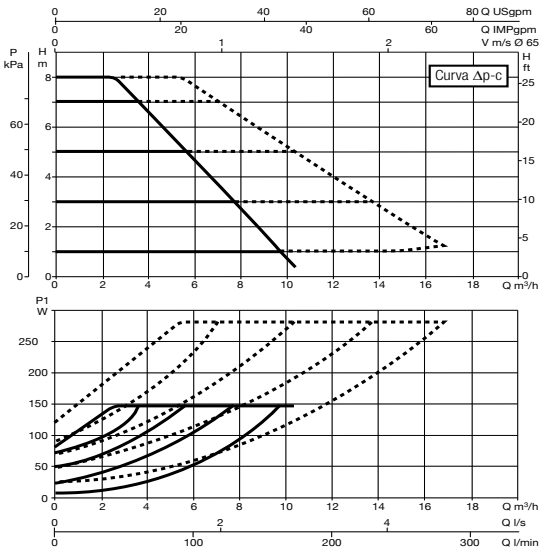

Curve tolerance according to ISO 9906.

EVOPLUS SMALL

ELECTRONIC CIRCULATORS FOR SMALL COMMUNITY HEATING

EVOPLUS D110/250.40 M

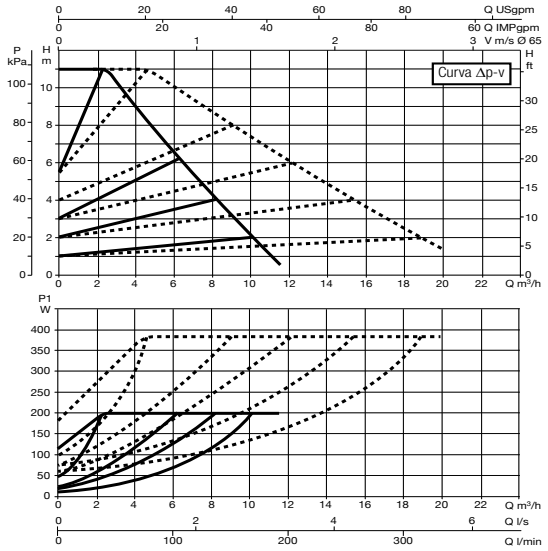

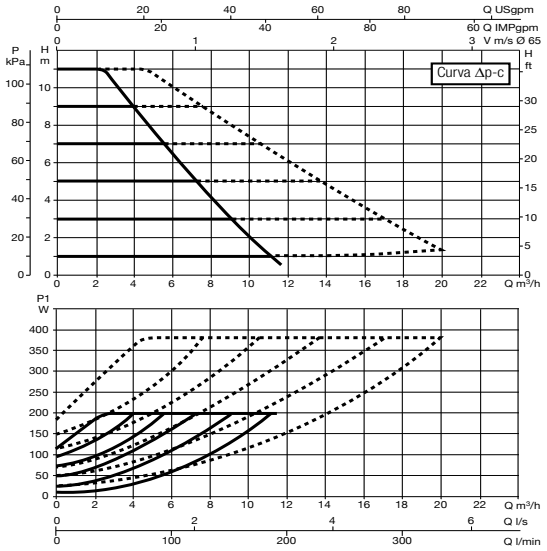

Curve tolerance according to ISO 9906.

DAB PUMPS reserves the right to make modifications without notice

EVOPLUS SMALL

ELECTRONIC CIRCULATORS FOR SMALL COMMUNITY HEATING

DIMENSIONS AND WEIGHTS

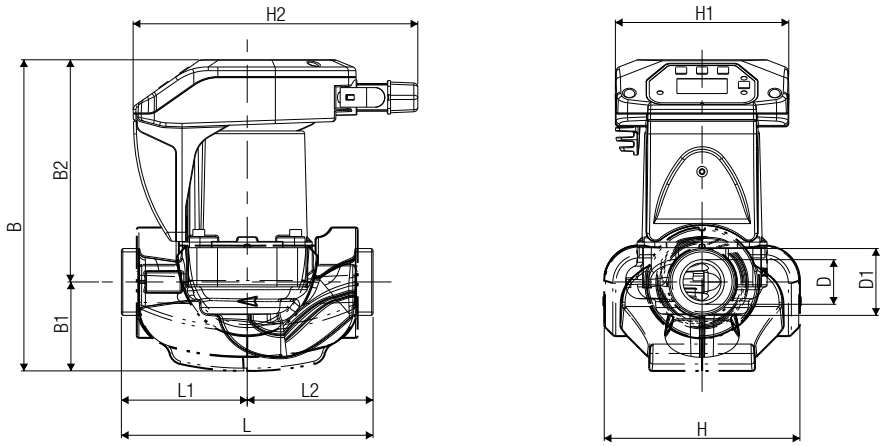

MODEL	unit	L	L1	L2	L3	A	B	B1	B2	D	D1	D2	D3	D4	I	I1	I2	I3	M	H	H1	H2	WEIGHT	Q.TY x PALLET
EVOPLUS B .../220.32 M	inch	8.7	4.3	4.3	0.7	0.6	9.8	2.5	7.2	1.6	3.5	3.9	5.5	3	-	-	-	-	-	5.5	4.9	8	29.8 lbs	51
	mm	220	110	110	19	14	248	64	184	40	90	100	140	76	-	-	-	-	-	140	124	204	7.5 Kg	
EVOPLUS B .../250.40 M	inch	9.8	4.9	4.9	0.7	0.6	9.8	2.5	7.2	1.7	3.9	4.3	5.9	3.3	-	-	-	-	-	5.5	4.9	8	31.3 lbs	51
	mm	250	125	125	19	14	248	64	184	43	100	110	150	84	-	-	-	-	-	140	124	204	7.5 Kg	

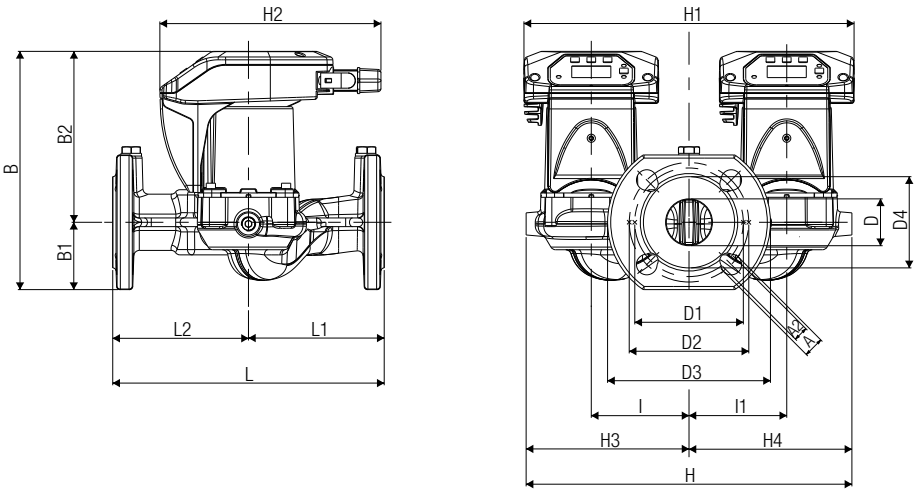

MODEL	units	L	L1	L2	L3	A	B	B1	B2	D	D1	D2	D3	D4	I	I1	M	H	H1	H2	H3	H4	WEIGHT	Q.TY x PALLET
EVOPLUS D .../220.32 M	inch	8.7	4.9	4.9	0.7	0.6	8.7	2.4	6.2	1.7	3.9	4.3	5.9	3.3	3.5	3.5	- -	11.8	12	8	5.9	5.9	13.5 lbs	30
	mm	220	125	125	19	14	220	62	158	43	100	110	150	84	90	90	- -	300	304	204	150	150	13.5 Kg	
EVOPLUS D .../250.40 M	inch	9.8	4.9	4.9	0.7	0.6	8.7	2.4	6.2	1.7	3.9	4.3	5.9	3.3	3.5	3.5	- -	11.8	12	8	5.9	5.9	14.2 lbs	30
	mm	250	125	125	19	14	220	62	158	43	100	110	150	84	90	90	- -	300	304	204	150	150	14.2 Kg	

EVOPLUS

CIRCULATORS FOR HEATING AND AIR-CONDITIONING SYSTEMS



evoplus

EVOPLUS electronic circulators can be used in heating, ventilation and air conditioning systems for residential and commercial buildings. In all correctly sized installations, the electronically controlled wet rotor pumps constantly ensure sufficient power and, simultaneously, lower noise emissions, greater comfort and a significant reduction in running costs. All models fitted with flanged pump body are available in both single and twin versions. The user interface is easy to use and easy to understand.

Circulator protection rate IP 44

Insulation class F

Standard voltage single-phase 220/240V, 50/60Hz

In accordance with European standards
EN 61800-3 - EN 60335-1 - EN 60335-2-51

Operating range
from 8.8 to 332.9 gpm (2 to 75.6 m³/h)
with head up to 59 ft (18 m)

Liquid Temperature range from 14°F to 230°F
(-10 °C to 110 °C)

Pumped liquid clean, free from solids and mineral oils, not viscous, chemically neutral, close to the properties of water (max. glycol contents 30%)

Maximum working pressure 232 psi (16 bar)

Standard flanging
DN 32, DN 40, DN 50, DN 65, PN 6 / PN 10 / PN 16 (4 slots), DN 80 e DN 100, PN 6 (4 slots) usable with flange 4 holes PN10

Special version on demand
DN 80 , DN 100 PN 10 / PN 16 (8 holes)

Installation with horizontal motor shaft

ErP ready | C US *PENDING APPROVAL* | D+ CONNECT PAG. 5 | ACCESSORIES PAG. 195

MODES OF OPERATION

All the functions listed below can be consulted by the users (including less experienced ones) by simply scrolling through the menu. The calibration and the modification of the parameters are protected, and can only be completed by expert users. The factory settings of the EVOPLUS range are for proportional differential pressure control mode in the curve that ensures the best energy efficiency index (EEI).

1 - ΔP-v proportional differential pressure adjustment mode

With ΔP-v adjustment mode, with the variation of the flow rate, the value of the delivery of the head also varies in a linear manner, from Hsetp to Hsetp/2.

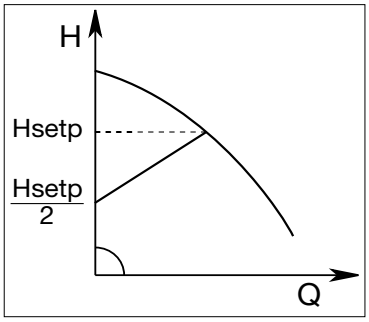

This adjustment is particularly indicated for the following systems:

a. Two-pipe heating systems with thermostat valves and with:
- -head greater than 13 ft (4 m);
- very long circuit piping;
- valves with wide operating range;
- differential pressure regulators;
- high pressure drops in those parts of the system carrying the entirety of the water flow rate;
- low differential pressure.

b. Under-floor central heating systems with thermostatic valves and significant pressure drops in the boiler circuit.

c. Systems with primary circuit pumps with high pressure drops.

Example of set-up of the set-point with ΔP-v

The following operating point is required:
Q = 28.6 gpm (6.5 m³/h)
H = 20 ft (6 m)

PROCEDURE:

1. In the graph, find the desired operating point, and then find the EVOPLUS curve closest to it (in this case the point lies precisely on the curve)
2. Follow the curve upwards until reaching the intersection with the limit curve of the circulator.
3. The head reading at this limit point is the set-point head that must be entered to obtain the desired operating point.

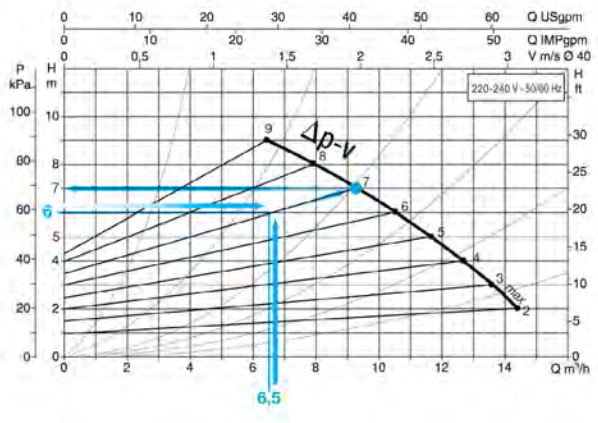

DAB PUMPS reserves the right to make modifications without notice

2 - ΔP-c constant differential pressure adjustment mode

The ΔP-c adjustment mode keeps the differential pressure of the system constantly at the H setp value set, even in case of variation of the flow rate.

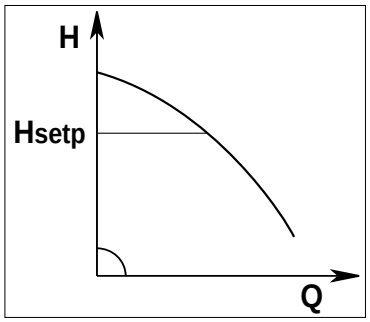

This adjustment is particularly indicated for the following systems:

a. Two-pipe heating systems with thermostat valves and with:
- head lower than 7 ft (2 m);
- natural circulation;
- low pressure drops in those parts of the system carrying the entirety of the water flow rate;
- high differential temperature (central heating).

b. underfloor heating systems with thermostat valves

c. single-pipe heating systems with thermostat valves and calibration valves

d. Systems with primary circuit pumps with low pressure drops.

3 - Constant curve adjustment modes

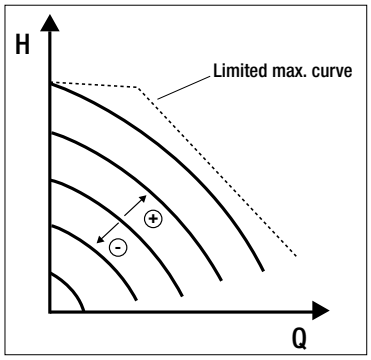

In this control mode, the circulator works based on constant speed characteristic curves. The operation curve is selected by setting the rotation speed using a percentage factor. The 100 % value indicates the maximum limit curve. The actual rotation speed may be affected by the power and differential pressure limitations of the actual circulator model. The rotation speed may be set using the display, or either a 0-10 V or PWM external signal.

Control mode indicated for constant flow rate heating and air conditioning systems.

4 - Constant differential pressure control mode with proportional control based on the water temperature

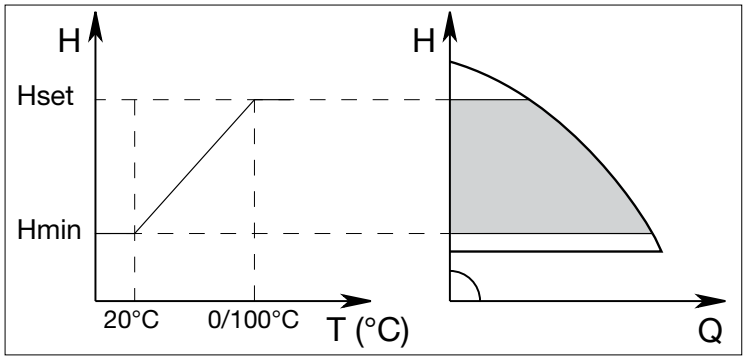

This adjustment is particularly indicated for the following systems:

a. In variable flow rate systems (two-pipe central heating systems), for which a further reduction of the circulator performance levels is provided in accordance with the lowering of the temperature of the circulating liquid, in case of reduced heating demand.

b. In constant flow rate systems (single-pipe and under-floor central heating systems), where the performance of the circulator can only be adjusted by activating the temperature influence function.
It is set through the EVOPLUS control panel.

ECONOMY MODE

The economy function can be set directly on the control panel, by setting a reduction value (f.rid), the maximum value of which can be 50%. In all the previously listed settings, the Hset value must be replaced with an Hset x f.rid.

EVOPLUS

CIRCULATORS FOR HEATING AND AIR-CONDITIONING SYSTEMS

TECHNICAL DATA - EVOPLUS B *SINGLE WITH FLANGES*

	MODEL	CODE	CENTRE DISTANCE		ELECTRICAL DATA		In A	COUNTERFLANGES ON REQUEST	E E I	MINIMUM SUCTION PRESSURE				
			inch	mm	VOLTAGE 60 Hz	P1 MAX W				t°	194°F	90°C	212°F	100°C
DN 32	**EVOPLUS B 120/220.32 M**	60150962	8.7	220	220/240 V	340	1.7	DN 32 PN 6	EEI ≤ 0.22	c.w.	66 ft	20 m	82 ft	25 m
DN 40	**EVOPLUS B 40/220.40 M**	60150963	8.7	220	220/240 V	90	0.7	DN 40 PN 10	EEI ≤ 0.23	c.w.	66 ft	20 m	82 ft	25 m
	EVOPLUS B 60/220.40 M	60150964	8.7	220	220/240 V	175	1	DN 40 PN 10	EEI ≤ 0.23	c.w.	66 ft	20 m	82 ft	25 m
	EVOPLUS B 80/220.40 M	60150965	8.7	220	220/240 V	260	1.35	DN 40 PN 10	EEI ≤ 0.21	c.w.	66 ft	20 m	82 ft	25 m
	EVOPLUS B 100/220.40 M	60150966	8.7	220	220/240 V	350	1.75	DN 40 PN 10	EEI ≤ 0.20	c.w.	66 ft	20 m	82 ft	25 m
	EVOPLUS B 120/250.40 M	60150967	9.8	250	220/240 V	465	2.2	DN 40 PN 10	EEI ≤ 0.20	c.w.	66 ft	20 m	82 ft	25 m
	EVOPLUS B 150/250.40 M	60150968	9.8	250	220/240 V	610	2.9	DN 40 PN 10	EEI ≤ 0.20	c.w.	66 ft	20 m	82 ft	25 m
	EVOPLUS B 180/250.40 M	60150969	9.8	250	220/240 V	610	2.9	DN 40 PN 10	EEI ≤ 0.20	c.w.	66 ft	20 m	82 ft	25 m
DN 50	**EVOPLUS B 40/240.50 M**	60150970	9.4	240	220/240 V	140	0.87	DN 50 PN 10	EEI ≤ 0.23	c.w.	66 ft	20 m	82 ft	25 m
	EVOPLUS B 60/240.50 M	60150971	9.4	240	220/240 V	260	1.35	DN 50 PN 10	EEI ≤ 0.21	c.w.	66 ft	20 m	82 ft	25 m
	EVOPLUS B 80/240.50 M	60150972	9.4	240	220/240 V	330	0.87	DN 50 PN 10	EEI ≤ 0.21	c.w.	66 ft	20 m	82 ft	25 m
	EVOPLUS B 100/280.50 M	60150973	11	280	220/240 V	430	2.1	DN 50 PN 10	EEI ≤ 0.20	c.w.	66 ft	20 m	82 ft	25 m
	EVOPLUS B 120/280.50 M	60150974	11	280	220/240 V	530	2.5	DN 50 PN 10	EEI ≤ 0.19	c.w.	66 ft	20 m	82 ft	25 m
	EVOPLUS B 150/280.50 M	60150975	11	280	220/240 V	640	3	DN 50 PN 10	EEI ≤ 0.19	c.w.	66 ft	20 m	82 ft	25 m
	EVOPLUS B 180/280.50 M	60150976	11	280	220/240 V	750	3.45	DN 50 PN 10	EEI ≤ 0.19	c.w.	66 ft	20 m	82 ft	25 m
DN 65	**EVOPLUS B 40/340.65 M**	60150977	13.4	340	220/240 V	190	1.1	DN 65 PN 10	EEI ≤ 0.21	c.w.	66 ft	20 m	82 ft	25 m
	EVOPLUS B 60/340.65 M	60150978	13.4	340	220/240 V	355	1.8	DN 65 PN 10	EEI ≤ 0.20	c.w.	66 ft	20 m	82 ft	25 m
	EVOPLUS B 80/340.65 M	60150979	13.4	340	220/240 V	465	2.2	DN 65 PN 10	EEI ≤ 0.19	c.w.	66 ft	20 m	82 ft	25 m
	EVOPLUS B 100/340.65 M	60150980	13.4	340	220/240 V	590	2.8	DN 65 PN 10	EEI ≤ 0.18	c.w.	66 ft	20 m	82 ft	25 m
	EVOPLUS B 120/340.65 M	60150981	13.4	340	220/240 V	730	3.45	DN 65 PN 10	EEI ≤ 0.18	c.w.	66 ft	20 m	82 ft	25 m
	EVOPLUS B 150/340.65 M	60150986	13.4	340	220/240 V	1210	5.5	DN 65 PN 10	EEI ≤ 0.18	c.w.	66 ft	20 m	82 ft	25 m
DN 80	**EVOPLUS B 40/360.80 M**	60150987	14.2	360	220/240 V	330	1.65	DN 80 PN 10	EEI ≤ 0.19	c.w.	66 ft	20 m	82 ft	25 m
	EVOPLUS B 60/360.80 M	60150988	14.2	360	220/240 V	535	2.5	DN 80 PN 10	EEI ≤ 0.20	c.w.	66 ft	20 m	82 ft	25 m
	EVOPLUS B 80/360.80 M	60150989	14.2	360	220/240 V	670	3	DN 80 PN 10	EEI ≤ 0,20	c.w.	66 ft	20 m	82 ft	25 m
	EVOPLUS B 100/360.80 M	60150990	14.2	360	220/240 V	1005	4.5	DN 80 PN 10	EEI ≤ 0.19	c.w.	66 ft	20 m	82 ft	25 m
	EVOPLUS B 120/360.80 M	60150991	14.2	360	220/240 V	1235	5.5	DN 80 PN 10	EEI ≤ 0.19	c.w.	66 ft	20 m	82 ft	25 m
DN 100	**EVOPLUS B 40/450.100 M**	60150992	17.7	450	220/240 V	530	2.5	DN 100 PN 10	EEI ≤ 0.19	c.w.	66 ft	20 m	82 ft	25 m
	EVOPLUS B 60/450.100 M	60150993	17.7	450	220/240 V	760	3.5	DN 100 PN 10	EEI ≤ 0.18	c.w.	66 ft	20 m	82 ft	25 m
	EVOPLUS B 80/450.100 M	60150994	17.7	450	220/240 V	1080	4.8	DN 100 PN 10	EEI ≤ 0,18	c.w.	66 ft	20 m	82 ft	25 m
	EVOPLUS B 100/450.100 M	60150995	17.7	450	220/240 V	1380	6	DN 100 PN 10	EEI ≤ 0.19	c.w.	66 ft	20 m	82 ft	25 m
	EVOPLUS B 120/450.100 M	60150999	17.7	450	220/240 V	1560	7	DN 100 PN 10	EEI ≤ 0.19	c.w.	66 ft	20 m	82 ft	25 m

DAB PUMPS reserves the right to make modifications without notice

EVOPLUS

CIRCULATORS FOR HEATING AND AIR-CONDITIONING SYSTEMS

SPECIAL VERSION - *TWIN FLANGED* ***PN 16***

	MODEL	CODE	CENTRE DISTANCE		ELECTRICAL DATA		In A	COUNTERFLANGES ON REQUEST	EEI
			inch	mm	VOLTAGE 60 Hz	P1 MAX W			
DN 80	EVOPLUS B 40/360.80 M	60153017	14.2	360	220/240 V	330	1.65	DN80 PN 16	EEI ≤ 0.19
	EVOPLUS B 60/360.80 M	60153018	14.2	360	220/240 V	535	2.5	DN80 PN 16	EEI ≤ 0.20
	EVOPLUS B 80/360.80 M	60153019	14.2	360	220/240 V	670	3	DN80 PN 16	EEI ≤ 0.20
	EVOPLUS B 100/360.80 M	60153020	14.2	360	220/240 V	1005	4.5	DN80 PN 16	EEI ≤ 0.19
	EVOPLUS B 120/360.80 M	60153021	14.2	360	220/240 V	1235	5.5	DN80 PN 16	EEI ≤ 0.19
DN 100	EVOPLUS B 40/450.100 M	60153022	17.7	450	220/240 V	530	2.5	DN100 PN 16	EEI ≤ 0.19
	EVOPLUS B 60/450.100 M	60153023	17.7	450	220/240 V	760	3.5	DN100 PN 16	EEI ≤ 0.18
	EVOPLUS B 80/450.100 M	60153024	17.7	450	220/240 V	1080	4.8	DN100 PN 16	EEI ≤ 0.18
	EVOPLUS B 100/450.100 M	60153025	17.7	450	220/240 V	1380	6	DN100 PN 16	EEI ≤ 0.19
	EVOPLUS B 120/450.100 M	60153026	17.7	450	220/240 V	1560	7	DN100 PN 16	EEI ≤ 0.19

TECHNICAL DATA - EVOPLUS D *TWIN FLANGED*

	MODEL	CODE	CENTRE DISTANCE		ELECTRICAL DATA		In A	COUNTERFLANGES ON REQUEST	EEI	MINIMUM SUCTION PRESSURE				
			inch	mm	VOLTAGE 60 Hz	P1 MAX W				t°	194°F	90°C	212°F	100°C
DN 32	EVOPLUS D 120/220.32 M	60151000	8.7	220	220/240 V	340	1.7	DN 32 PN 6	EEI ≤ 0.22	c.w.	66 ft	20 m	82 ft	25 m
DN 40	EVOPLUS D 40/220.40 M	60151001	8.7	220	220/240 V	90	0.7	DN 40 PN 10	EEI ≤ 0.23	c.w.	66 ft	20 m	82 ft	25 m
	EVOPLUS D 60/220.40 M	60151002	8.7	220	220/240 V	175	1	DN 40 PN 10	EEI ≤ 0.23	c.w.	66 ft	20 m	82 ft	25 m
	EVOPLUS D 80/220.40 M	60151003	8.7	220	220/240 V	260	1.35	DN 40 PN 10	EEI ≤ 0.23	c.w.	66 ft	20 m	82 ft	25 m
	EVOPLUS D 100/220.40 M	60151004	8.7	220	220/240 V	350	1.75	DN 40 PN 10	EEI ≤ 0.23	c.w.	66 ft	20 m	82 ft	25 m
	EVOPLUS D 120/250.40 M	60151005	9.8	250	220/240 V	465	2.2	DN 40 PN 10	EEI ≤ 0.23	c.w.	66 ft	20 m	82 ft	25 m
	EVOPLUS D 150/250.40 M	60151006	9.8	250	220/240 V	610	2.9	DN 40 PN 10	EEI ≤ 0.23	c.w.	66 ft	20 m	82 ft	25 m
	EVOPLUS D 180/250.40 M	60151007	9.8	250	220/240 V	610	2.9	DN 40 PN 10	EEI ≤ 0.23	c.w.	66 ft	20 m	82 ft	25 m
DN 50	EVOPLUS D 40/240.50 M	60151008	9.4	240	220/240 V	140	0.87	DN 50 PN 10	EEI ≤ 0.23	c.w.	66 ft	20 m	82 ft	25 m
	EVOPLUS D 60/240.50 M	60151009	9.4	240	220/240 V	260	1.35	DN 50 PN 10	EEI ≤ 0.22	c.w.	66 ft	20 m	82 ft	25 m
	EVOPLUS D 80/240.50 M	60151010	9.4	240	220/240 V	330	1.7	DN 50 PN 10	EEI ≤ 0.22	c.w.	66 ft	20 m	82 ft	25 m
	EVOPLUS D 100/280.50 M	60151011	11	280	220/240 V	430	2.1	DN 50 PN 10	EEI ≤ 0.22	c.w.	66 ft	20 m	82 ft	25 m
	EVOPLUS D 120/280.50 M	60151012	11	280	220/240 V	530	2.5	DN 50 PN 10	EEI ≤ 0.22	c.w.	66 ft	20 m	82 ft	25 m
	EVOPLUS D 150/280.50 M	60151013	11	280	220/240 V	640	3	DN 50 PN 10	EEI ≤ 0.21	c.w.	66 ft	20 m	82 ft	25 m
	EVOPLUS D 180/280.50 M	60151014	11	280	220/240 V	750	3.45	DN 50 PN 10	EEI ≤ 0.21	c.w.	66 ft	20 m	82 ft	25 m
DN 65	EVOPLUS D 40/340.65 M	60151015	13.4	340	220/240 V	190	1.1	DN 65 PN 10	EEI ≤ 0.21	c.w.	66 ft	20 m	82 ft	25 m
	EVOPLUS D 60/340.65 M	60151016	13.4	340	220/240 V	355	1.8	DN 65 PN 10	EEI ≤ 0.21	c.w.	66 ft	20 m	82 ft	25 m
	EVOPLUS D 80/340.65 M	60151017	13.4	340	220/240 V	465	2.2	DN 65 PN 10	EEI ≤ 0.21	c.w.	66 ft	20 m	82 ft	25 m
	EVOPLUS D 100/340.65 M	60151018	13.4	340	220/240 V	590	2.8	DN 65 PN 10	EEI ≤ 0.20	c.w.	66 ft	20 m	82 ft	25 m
	EVOPLUS D 120/340.65 M	60151019	13.4	340	220/240 V	730	3.45	DN 65 PN 10	EEI ≤ 0.20	c.w.	66 ft	20 m	82 ft	25 m
	EVOPLUS D 150/340.65 M	60151020	13.4	340	220/240 V	1210	5.5	DN 65 PN 10	EEI ≤ 0.20	c.w.	66 ft	20 m	82 ft	25 m

EVOPLUS

CIRCULATORS FOR HEATING AND AIR-CONDITIONING SYSTEMS

TECHNICAL DATA - EVOPLUS D *TWIN FLANGED*

	MODEL	CODE	CENTRE DISTANCE		ELECTRICAL DATA		In A	COUNTERFLANGES ON REQUEST	EEI	MINIMUM SUCTION PRESSURE				
			inch	mm	VOLTAGE 60 Hz	P1 MAX W				t°	194°F	90°C	212°F	100°C
DN 80	**EVOPLUS D 40/360.80 M**	60151021	14.2	360	220/240 V	330	1.65	DN 80 PN 10	EEI ≤ 0.20	c.w.	66 ft	20 m	82 ft	25 m
	EVOPLUS D 60/360.80 M	60151022	14.2	360	220/240 V	535	2.5	DN 80 PN 10	EEI ≤ 0.20	c.w.	66 ft	20 m	82 ft	25 m
	EVOPLUS D 80/360.80 M	60151023	14.2	360	220/240 V	670	3	DN 80 PN 10	EEI ≤ 0.20	c.w.	66 ft	20 m	82 ft	25 m
	EVOPLUS D 100/360.80 M	60151024	14.2	360	220/240 V	1005	4.5	DN 80 PN 10	EEI ≤ 0.19	c.w.	66 ft	20 m	82 ft	25 m
	EVOPLUS D 120/360.80 M	60151025	14.2	360	220/240 V	1235	5.5	DN 80 PN 10	EEI ≤ 0.19	c.w.	66 ft	20 m	82 ft	25 m
DN 100	**EVOPLUS D 40/450.100 M**	60151026	17.7	450	220/240 V	530	2.5	DN 100 PN 10	EEI ≤ 0.19	c.w.	66 ft	20 m	82 ft	25 m
	EVOPLUS D 60/450.100 M	60151027	17.7	450	220/240 V	760	3.5	DN 100 PN 10	EEI ≤ 0.19	c.w.	66 ft	20 m	82 ft	25 m
	EVOPLUS D 80/450.100 M	60151028	17.7	450	220/240 V	1080	4.8	DN 100 PN 10	EEI ≤ 0.20	c.w.	66 ft	20 m	82 ft	25 m
	EVOPLUS D 100/450.100 M	60151029	17.7	450	220/240 V	1380	6	DN 100 PN 10	EEI ≤ 0.20	c.w.	66 ft	20 m	82 ft	25 m
	EVOPLUS D 120/450.100 M	60151030	17.7	450	220/240 V	1560	7	DN 100 PN 10	EEI ≤ 0.20	c.w.	66 ft	20 m	82 ft	25 m

SPECIAL VERSION - *TWIN FLANGED **PN 16***

	MODEL	CODE	CENTRE DISTANCE		ELECTRICAL DATA		In A	COUNTERFLANGES ON REQUEST	EEI	MINIMUM SUCTION PRESSURE				
			inch	mm	VOLTAGE 60 Hz	P1 MAX W				t°	194°F	90°C	212°F	100°C
DN 80	**EVOPLUS D 40/360.80 M**	60153028	14.2	360	220/240 V	330	1.65	DN 80 PN 16	EEI ≤ 0.20	c.w.	66 ft	20 m	82 ft	25 m
	EVOPLUS D 60/360.80 M	60153029	14.2	360	220/240 V	535	2.5	DN 80 PN 16	EEI ≤ 0.20	c.w.	66 ft	20 m	82 ft	25 m
	EVOPLUS D 80/360.80 M	60153030	14.2	360	220/240 V	670	3	DN 80 PN 16	EEI ≤ 0.20	c.w.	66 ft	20 m	82 ft	25 m
	EVOPLUS D 100/360.80 M	60153031	14.2	360	220/240 V	1005	4.5	DN 80 PN 16	EEI ≤ 0.19	c.w.	66 ft	20 m	82 ft	25 m
	EVOPLUS D 120/360.80 M	60153032	14.2	360	220/240 V	1235	5.5	DN 80 PN 16	EEI ≤ 0.19	c.w.	66 ft	20 m	82 ft	25 m
DN 100	**EVOPLUS D 40/450.100 M**	60153033	17.7	450	220/240 V	530	2.5	DN 100 PN 16	EEI ≤ 0.19	c.w.	66 ft	20 m	82 ft	25 m
	EVOPLUS D 60/450.100 M	60153034	17.7	450	220/240 V	760	3.5	DN 100 PN 16	EEI ≤ 0.19	c.w.	66 ft	20 m	82 ft	25 m
	EVOPLUS D 80/450.100 M	60153035	17.7	450	220/240 V	1080	4.8	DN 100 PN 16	EEI ≤ 0.20	c.w.	66 ft	20 m	82 ft	25 m
	EVOPLUS D 100/450.100 M	60153036	17.7	450	220/240 V	1380	6	DN 100 PN 16	EEI ≤ 0.20	c.w.	66 ft	20 m	82 ft	25 m
	EVOPLUS D 120/450.100 M	60153037	17.7	450	220/240 V	1560	7	DN 100 PN 16	EEI ≤ 0.20	c.w.	66 ft	20 m	82 ft	25 m

DAB PUMPS reserves the right to make modifications without notice

EVOPLUS

RANGE PERFORMANCE

EVOPLUS B 120/220.32 M

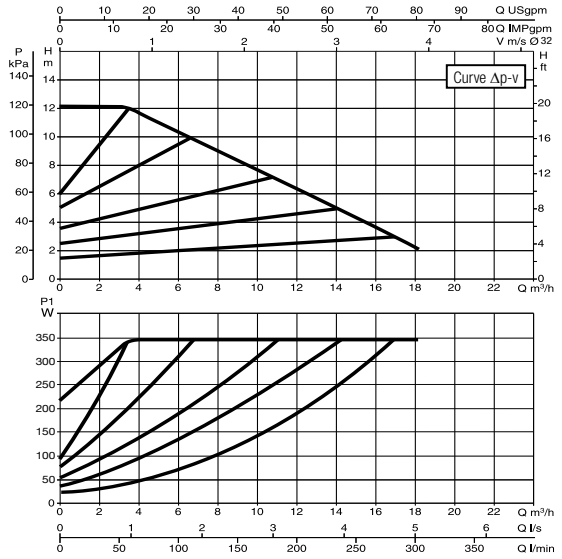

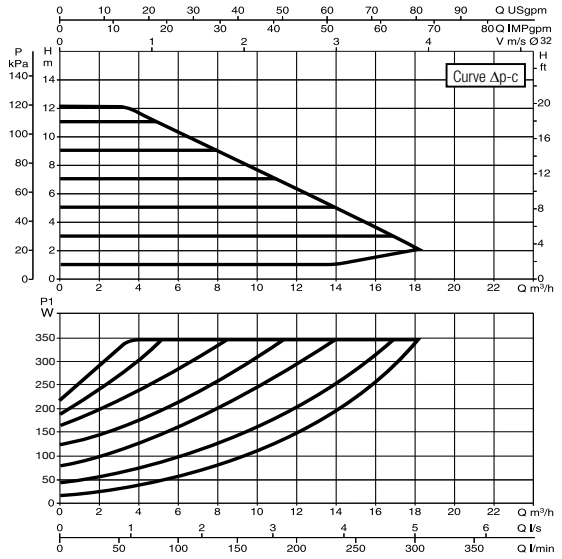

EVOPLUS B 40/220.40 M

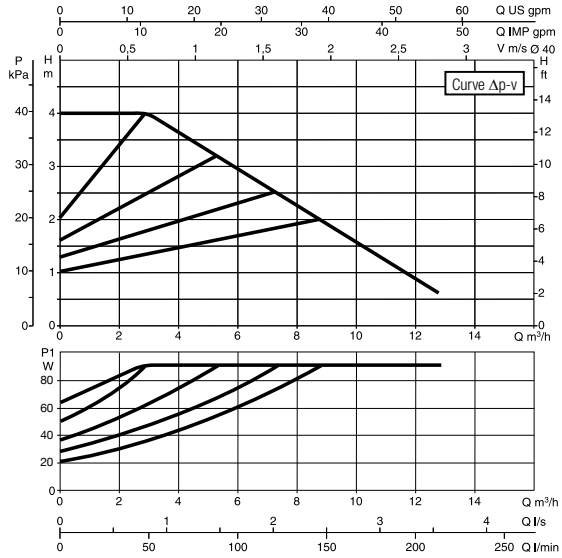

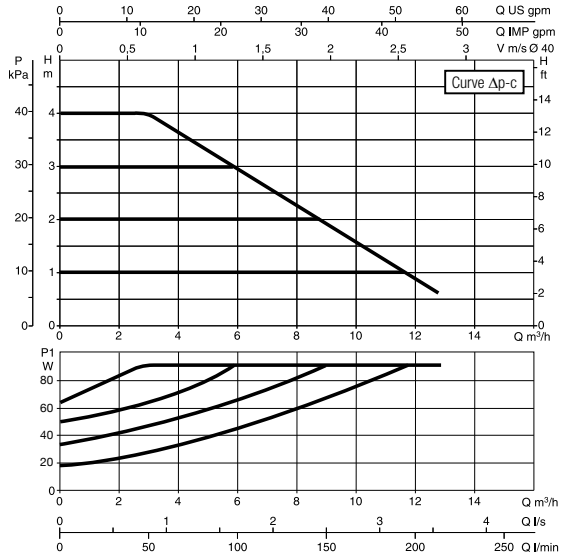

EVOPLUS B 60/220.40 M

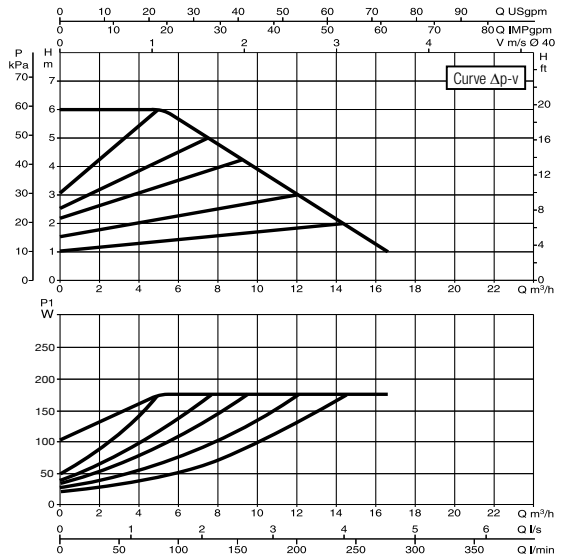

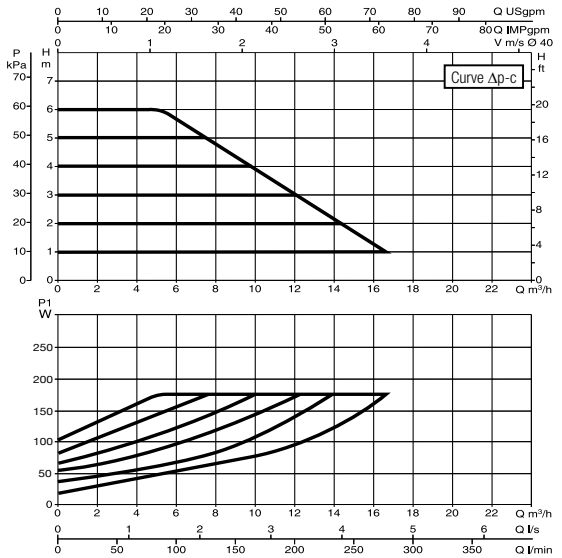

Curve tolerance according to ISO 9906.

EVOPLUS

RANGE PERFORMANCE

EVOPLUS B 80/220.40 M

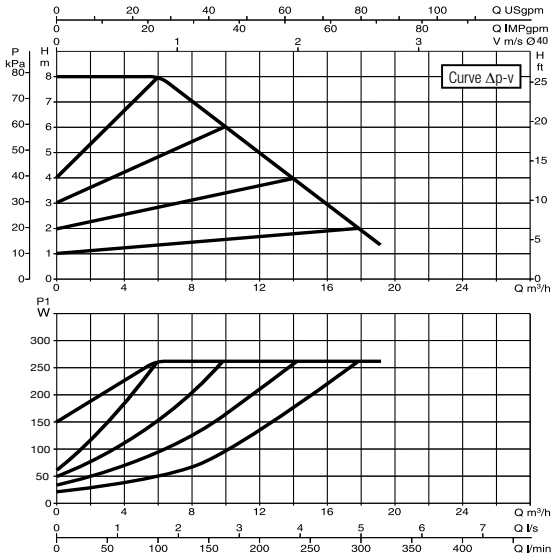

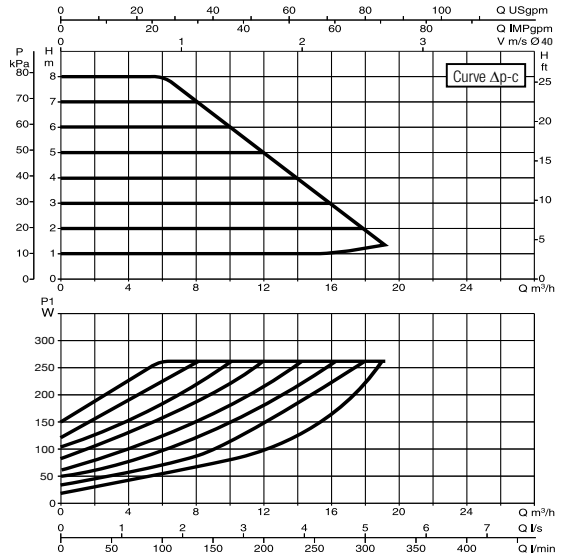

EVOPLUS B 100/220.40 M

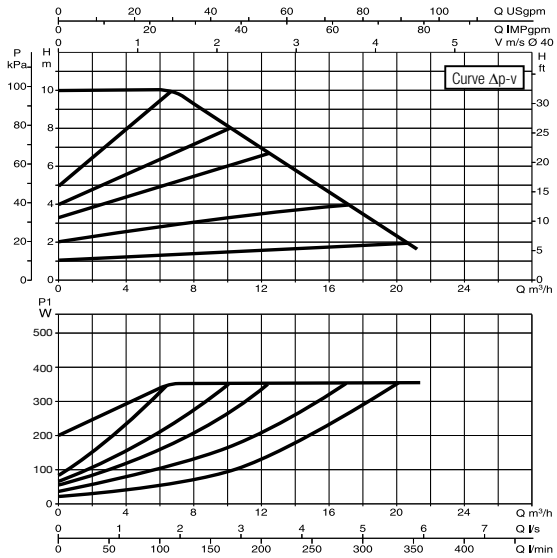

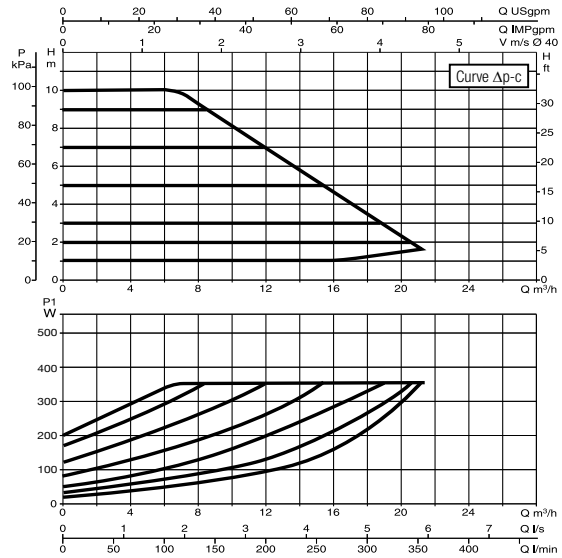

EVOPLUS B 120/250.40 M

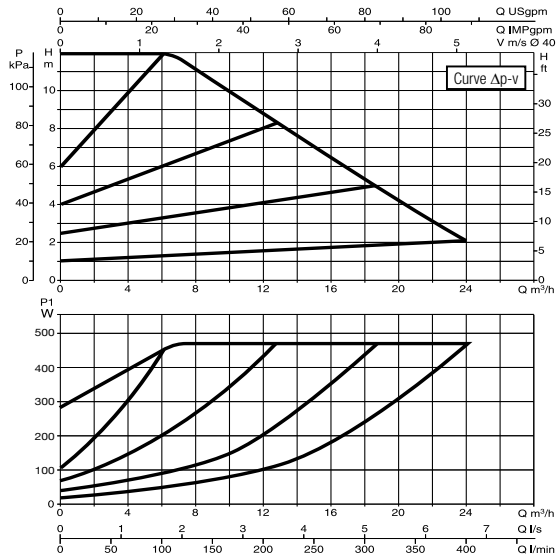

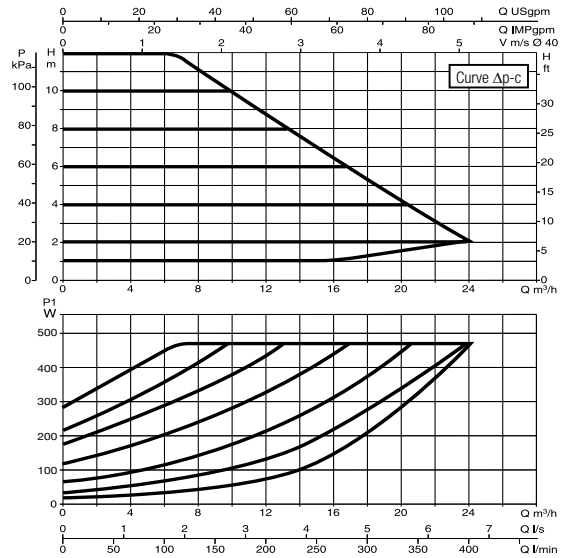

Curve tolerance according to ISO 9906.

EVOPLUS

RANGE PERFORMANCE

EVOPLUS B 150/250.40 M

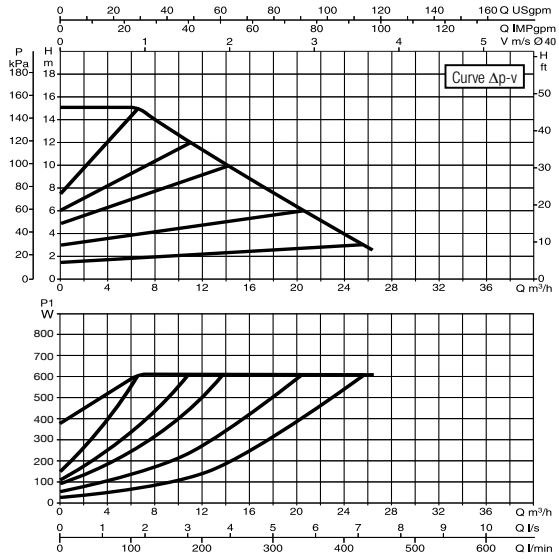

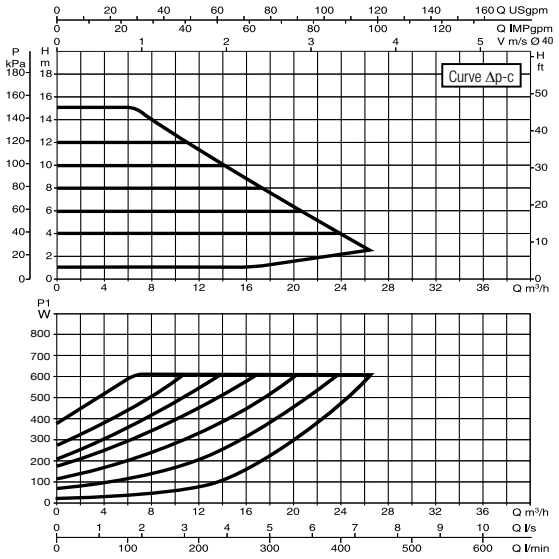

EVOPLUS B 180/250.40 M

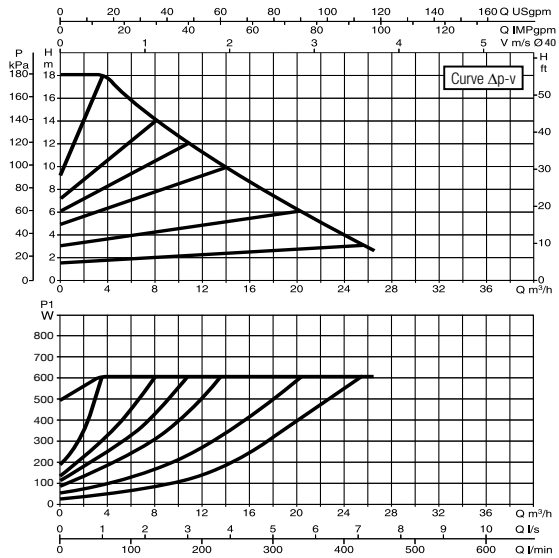

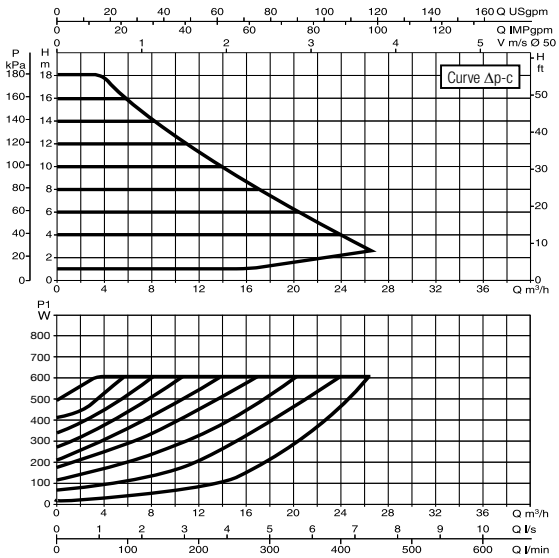

EVOPLUS B 40/240.50 M

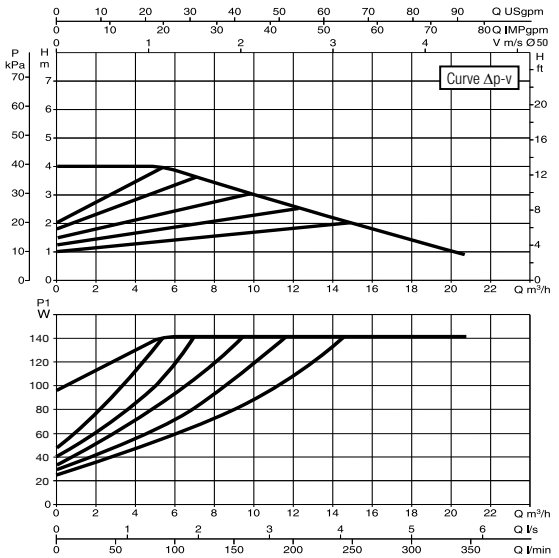

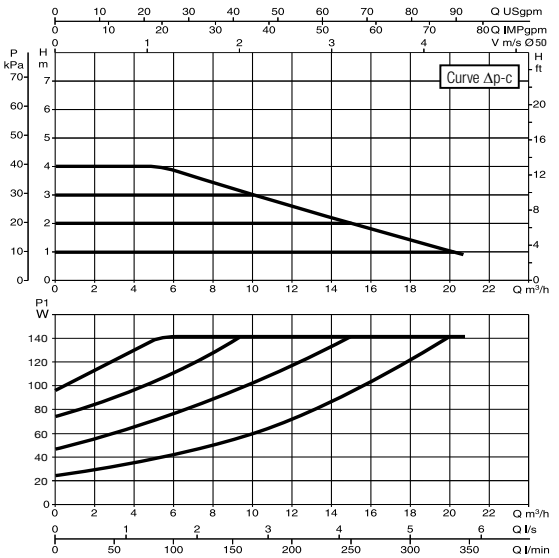

Curve tolerance according to ISO 9906.

EVOPLUS

RANGE PERFORMANCE

EVOPLUS B 60/240.50 M

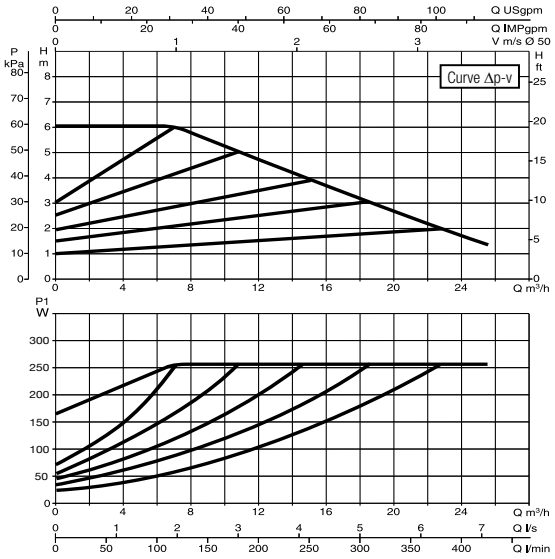

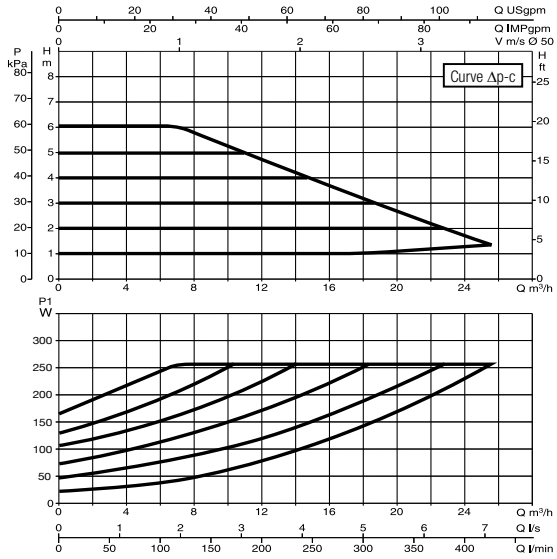

EVOPLUS B 80/240.50 M

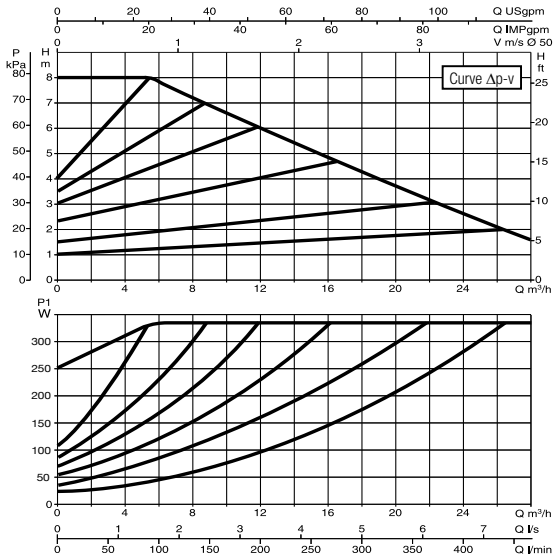

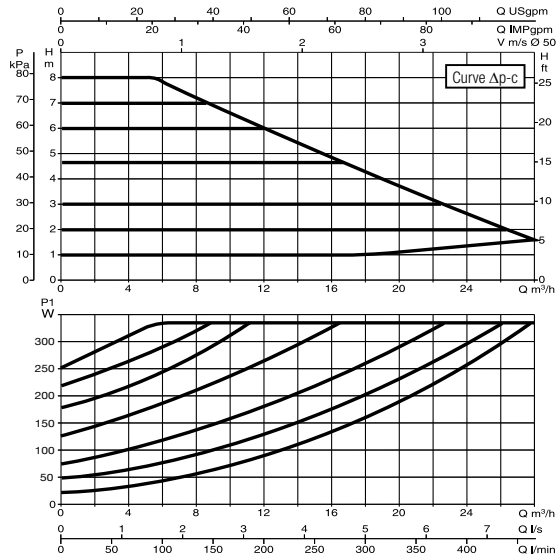

EVOPLUS B 100/280.50 M

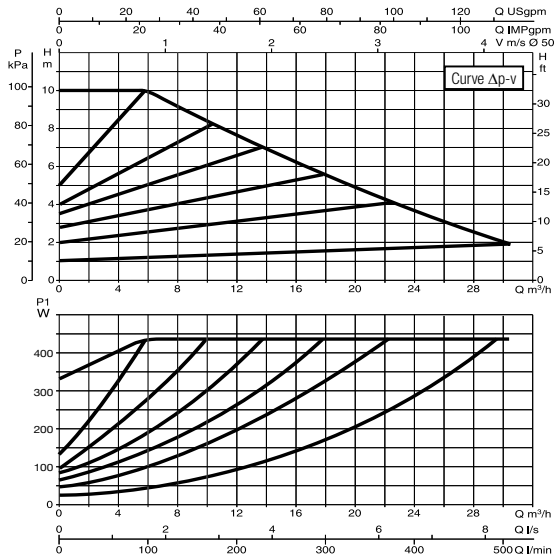

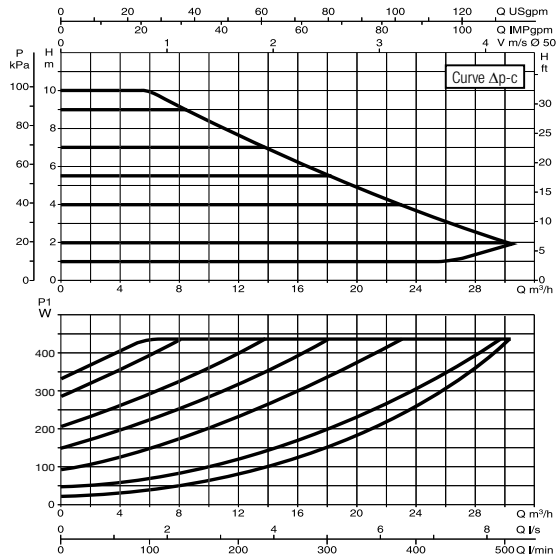

Curve tolerance according to ISO 9906.

EVOPLUS

RANGE PERFORMANCE

EVOPLUS B 120/280.50 M

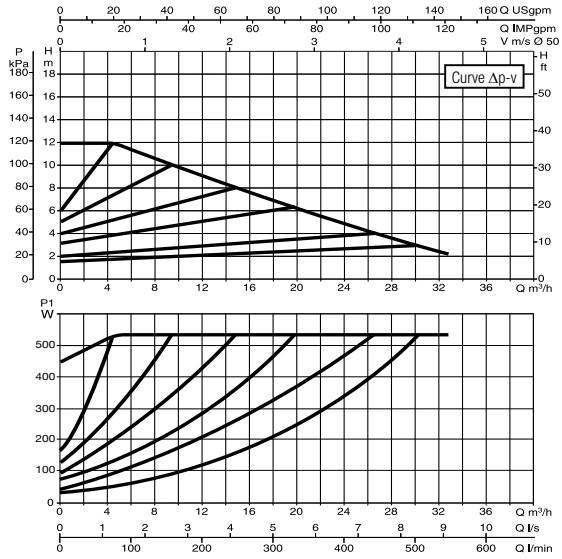

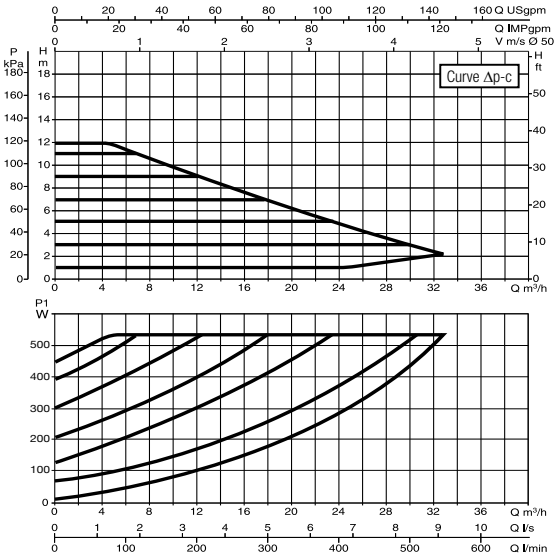

EVOPLUS B 150/280.50 M

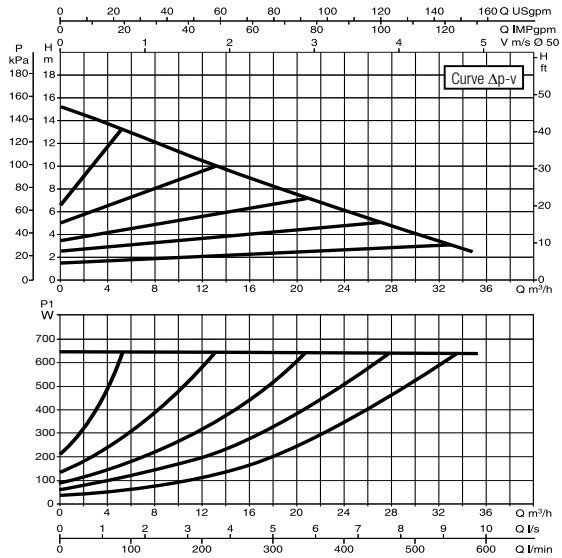

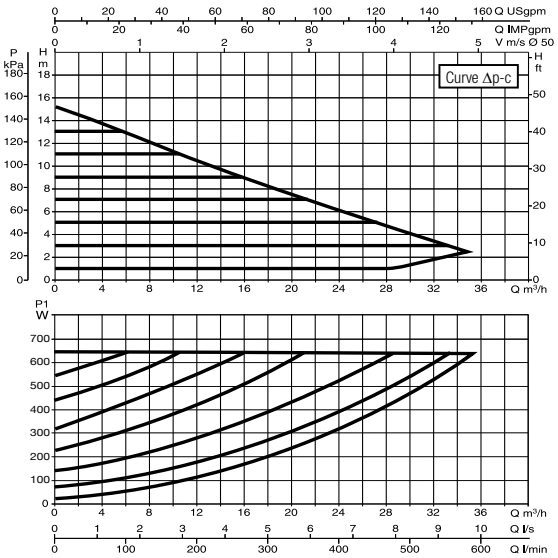

EVOPLUS B 180/280.50 M

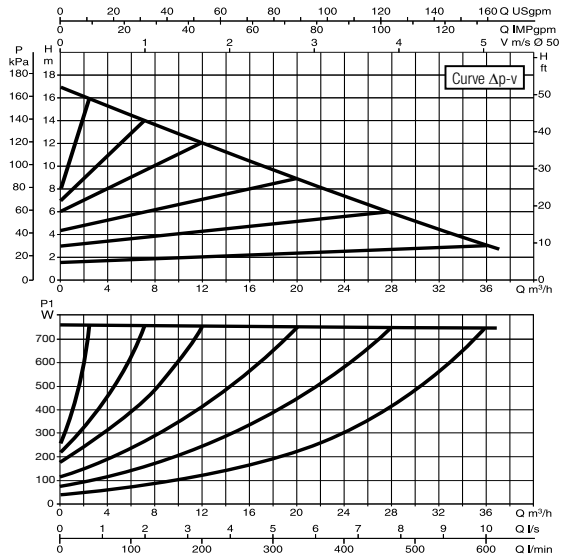

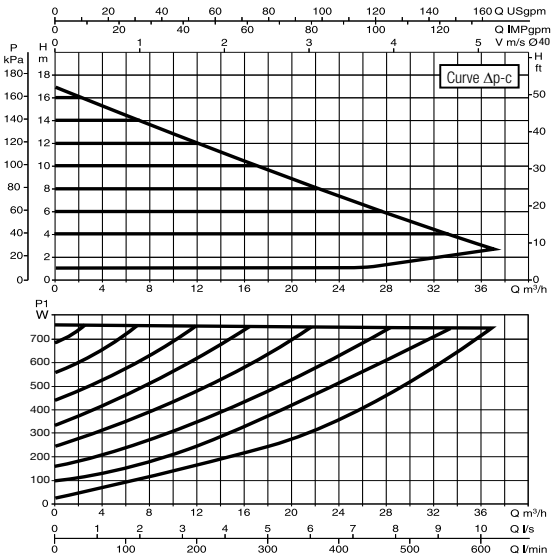

Curve tolerance according to ISO 9906.

EVOPLUS

RANGE PERFORMANCE

EVOPLUS B 40/340.65 M

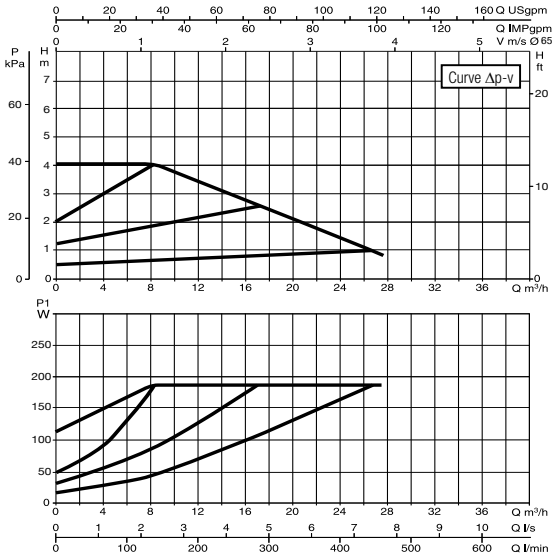

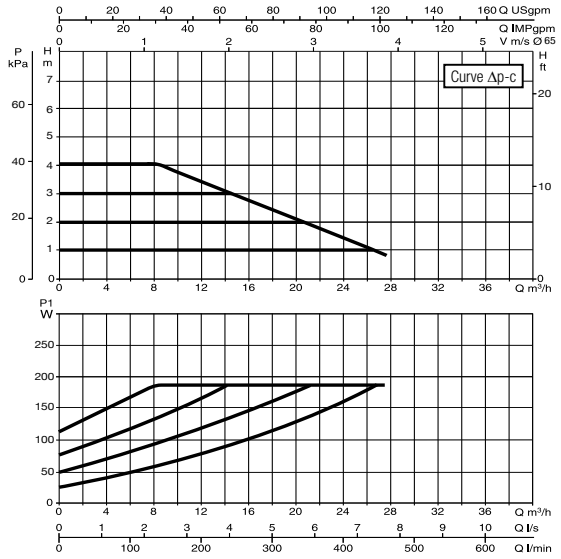

EVOPLUS B 60/340.65 M

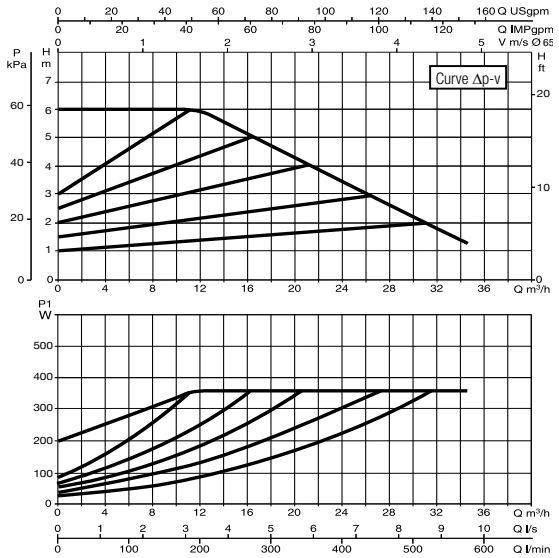

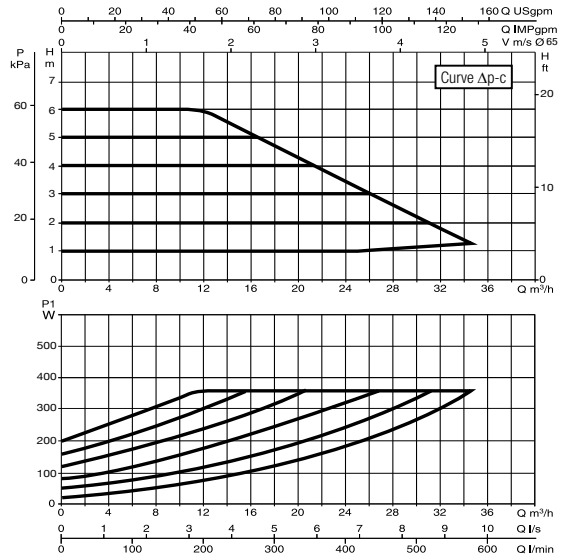

EVOPLUS B 80/340.65 M

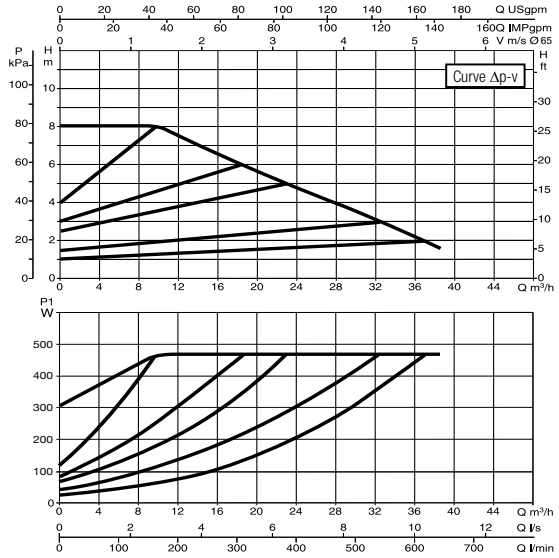

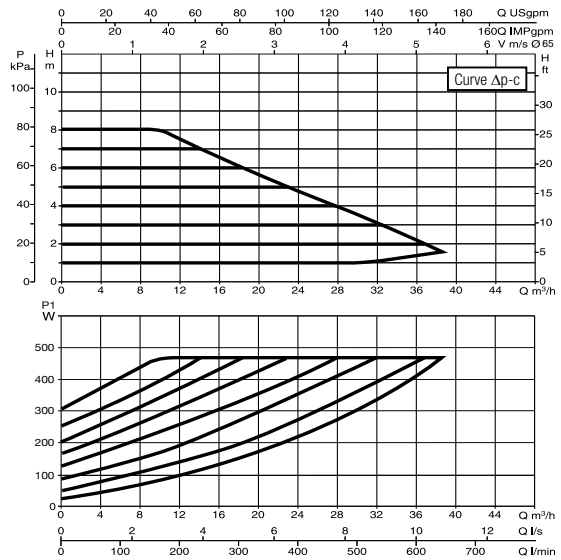

Curve tolerance according to ISO 9906.

EVOPLUS

RANGE PERFORMANCE

EVOPLUS B 100/340.65 M

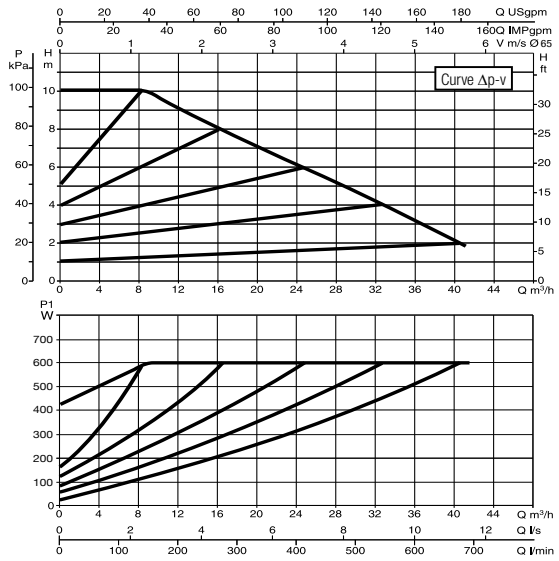

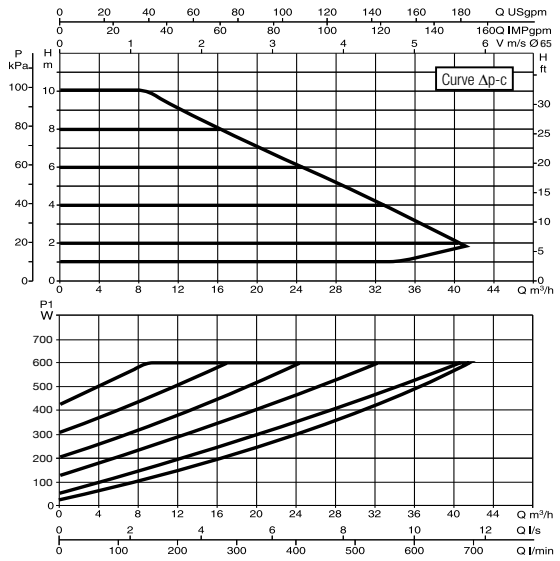

EVOPLUS B 120/340.65 M

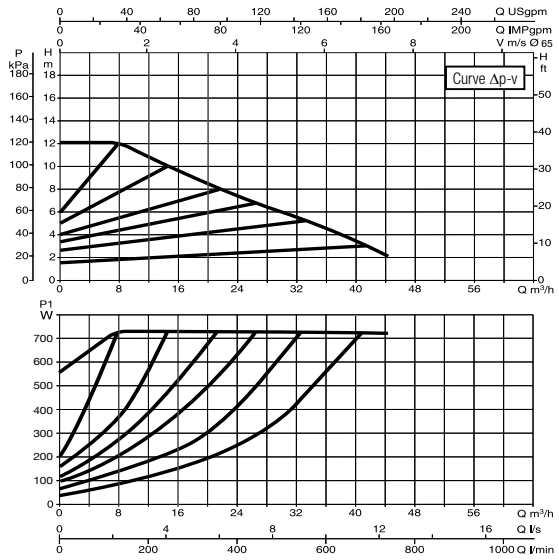

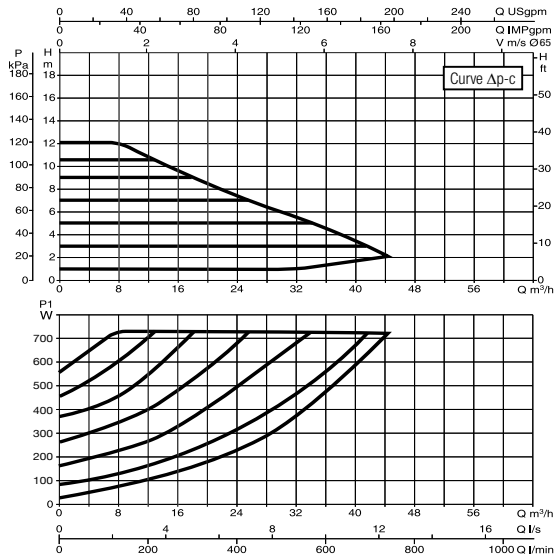

EVOPLUS B 150/340.65 M

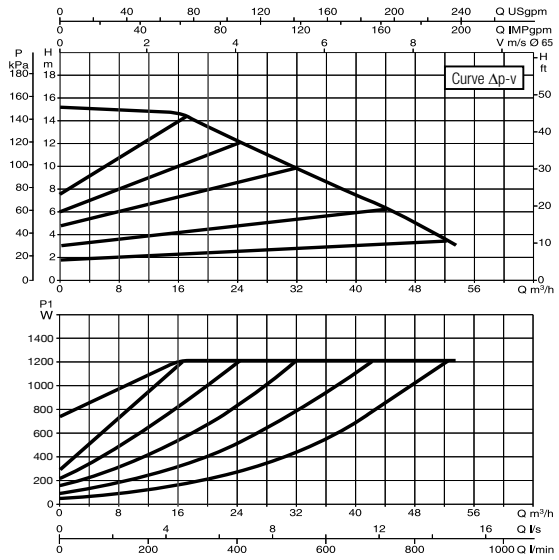

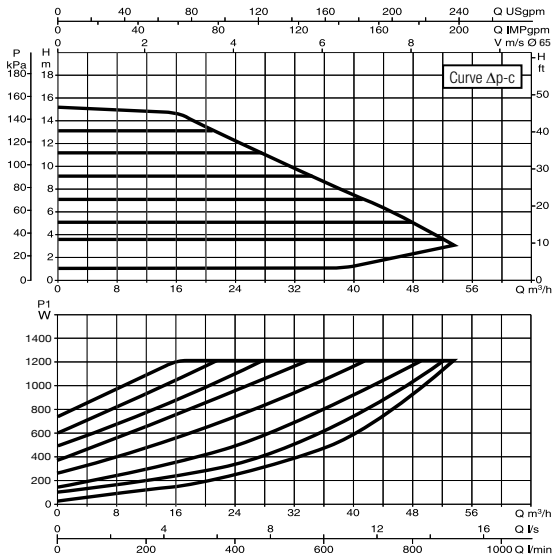

Curve tolerance according to ISO 9906.

EVOPLUS

RANGE PERFORMANCE

EVOPLUS B 40/360.80 M

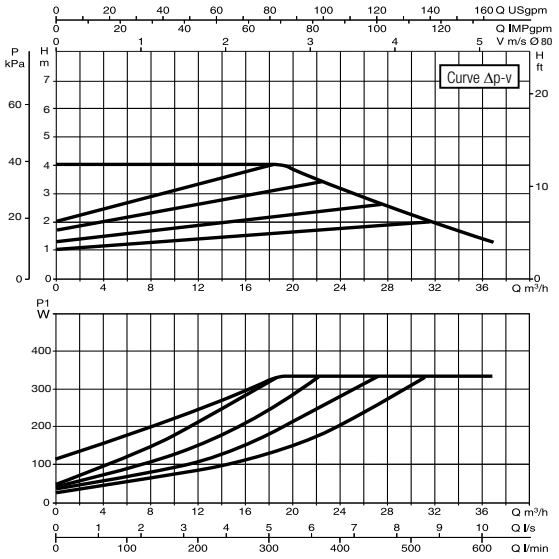

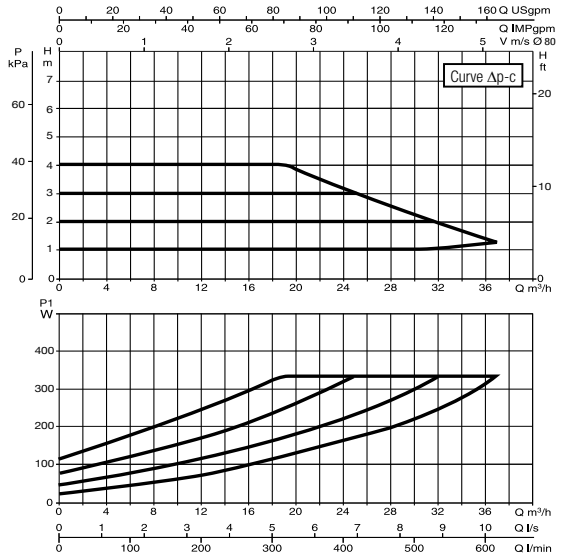

EVOPLUS B 60/360.80 M

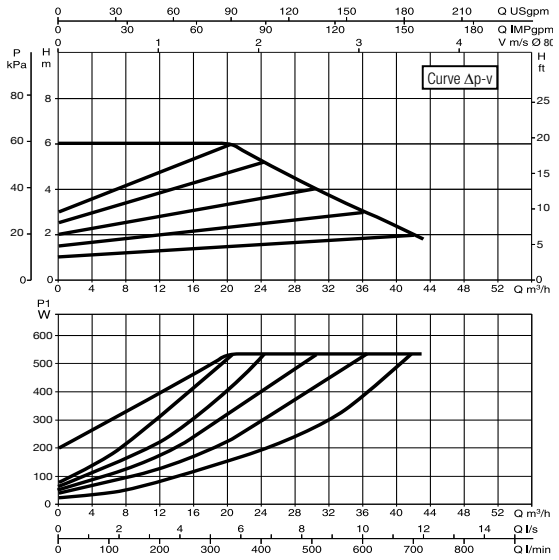

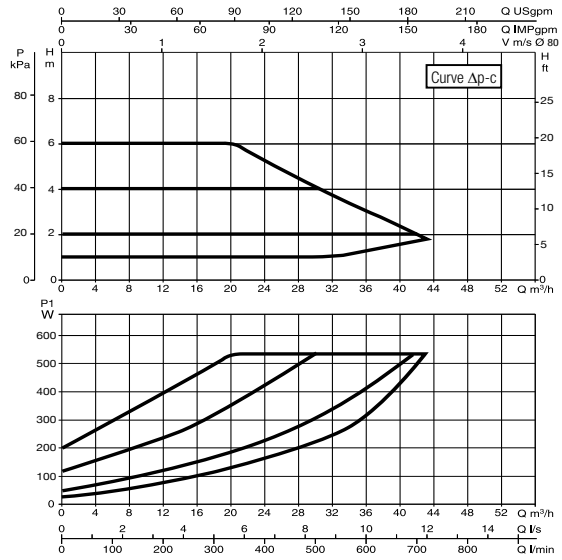

EVOPLUS B 80/360.80 M

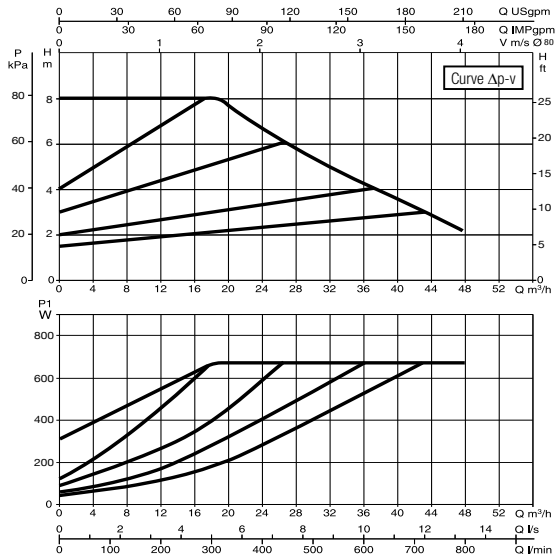

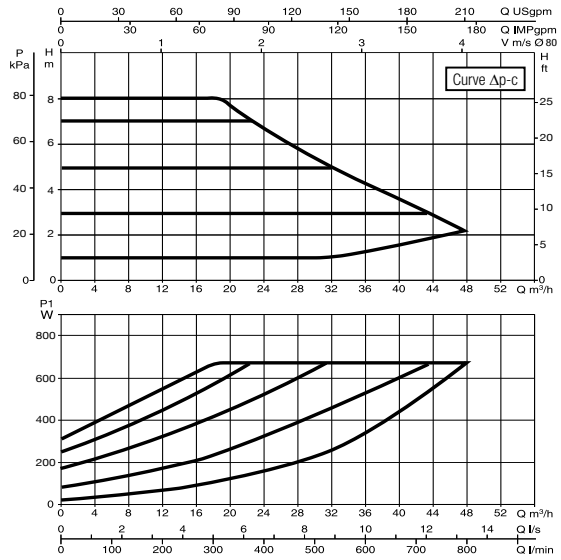

Curve tolerance according to ISO 9906.

DAB PUMPS reserves the right to make modifications without notice

EVOPLUS

RANGE PERFORMANCE

EVOPLUS B 100/360.80 M

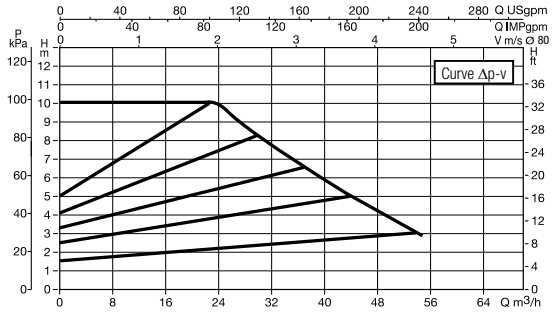

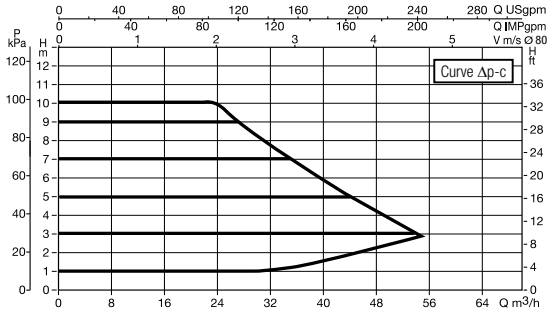

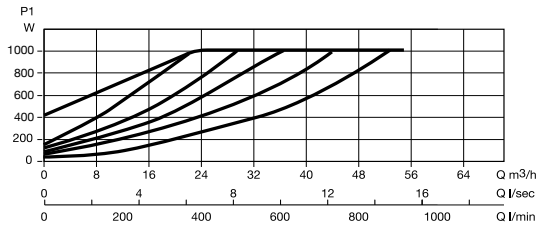

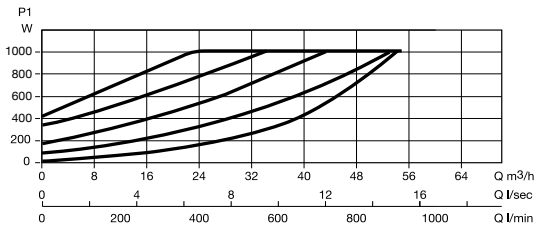

EVOPLUS B 120/360.80 M

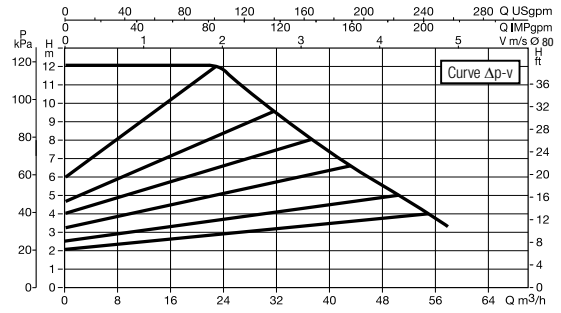

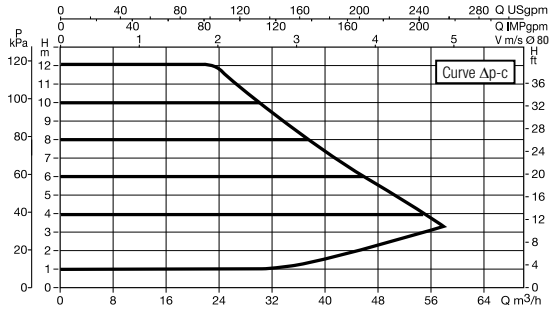

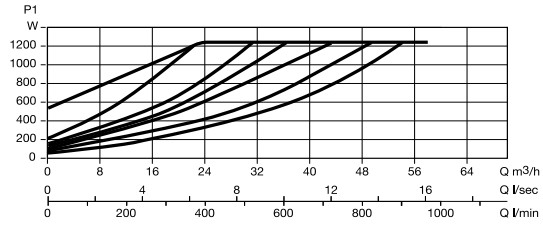

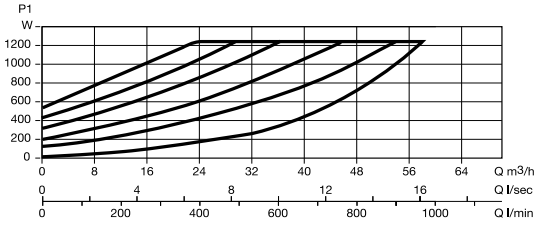

EVOPLUS B 40/450.100 M

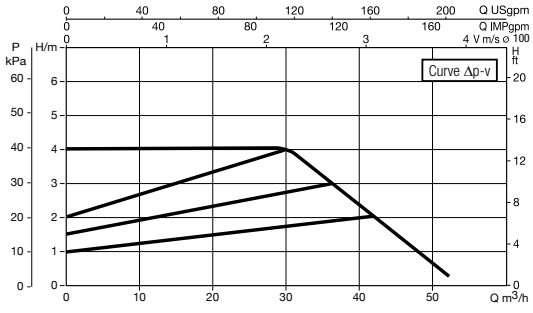

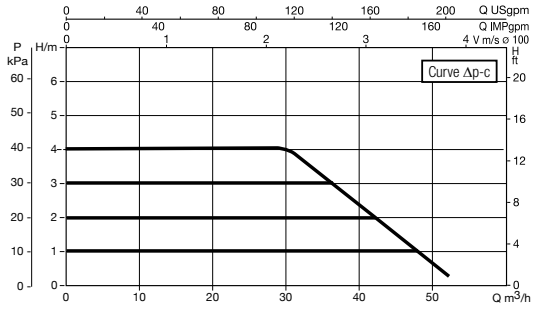

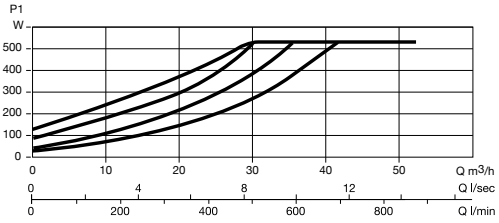

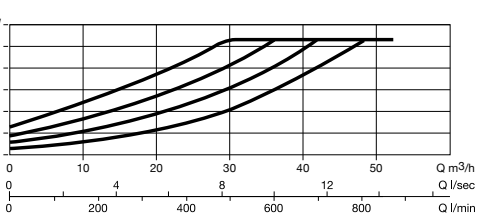

Curve tolerance according to ISO 9906.

EVOPLUS

RANGE PERFORMANCE

EVOPLUS B 60/450.100 M

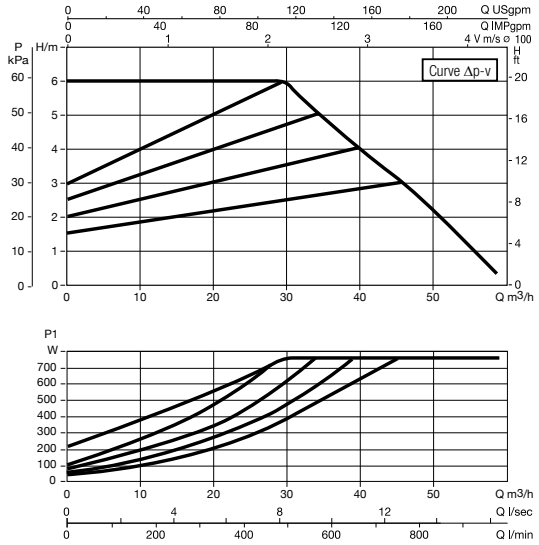

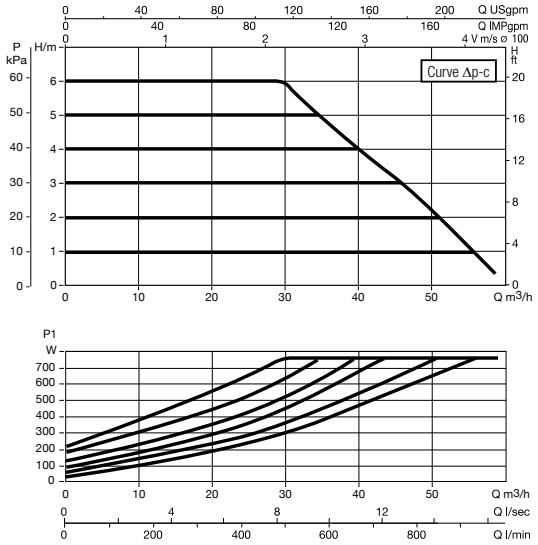

EVOPLUS B 80/450.100 M

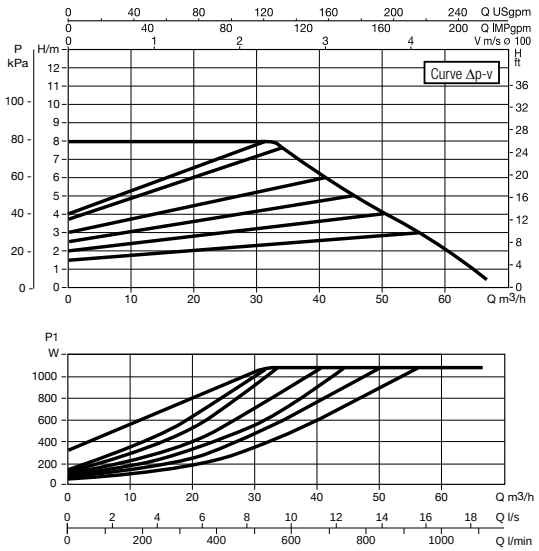

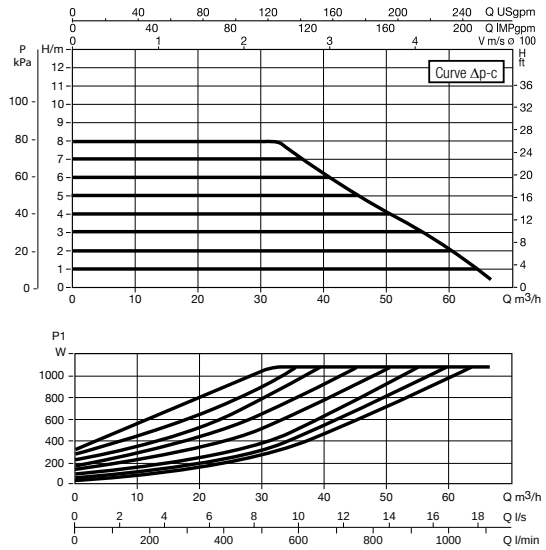

EVOPLUS B 100/450.100 M

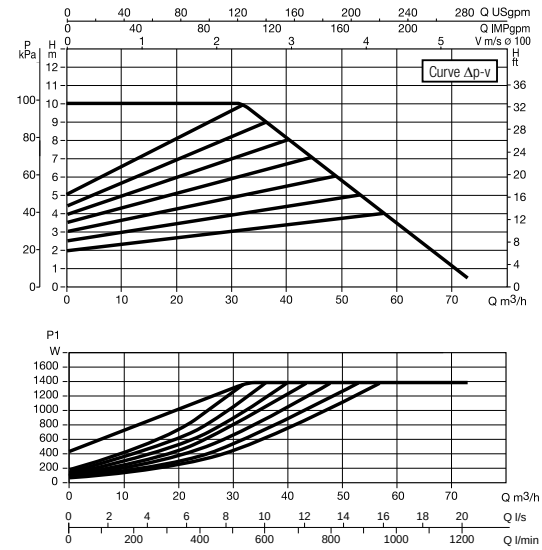

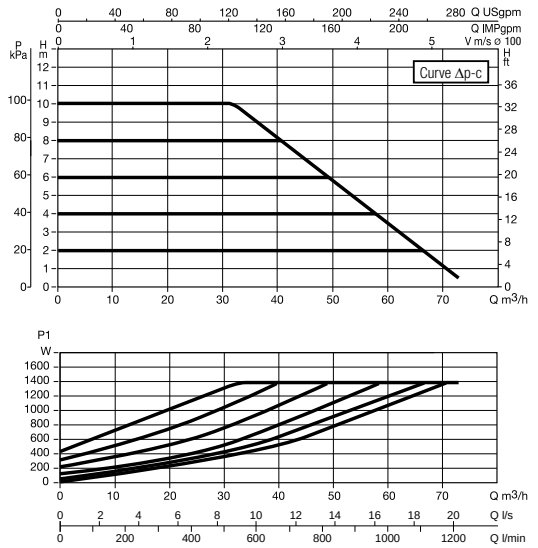

Curve tolerance according to ISO 9906.

EVOPLUS

RANGE PERFORMANCE

EVOPLUS B 120/450.100 M

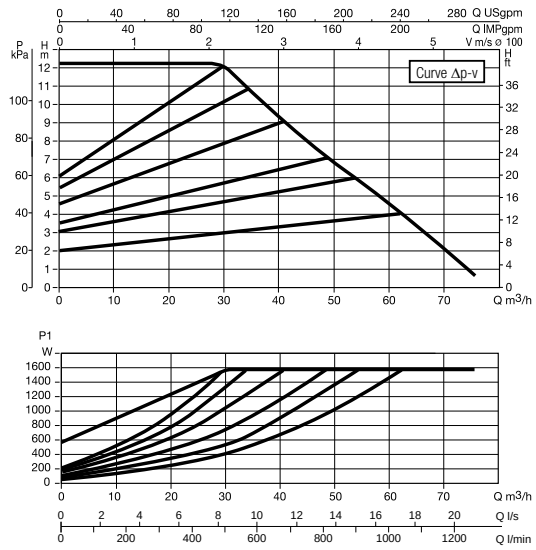

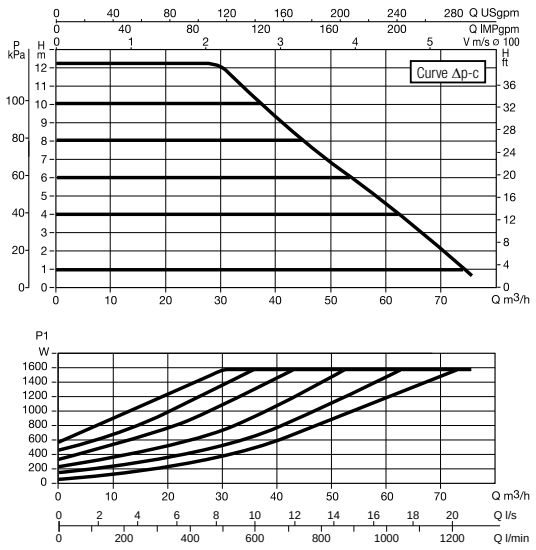

EVOPLUS D 120/220.32 M

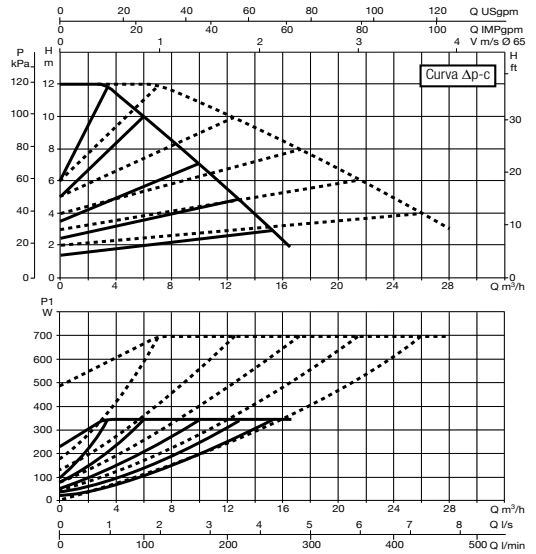

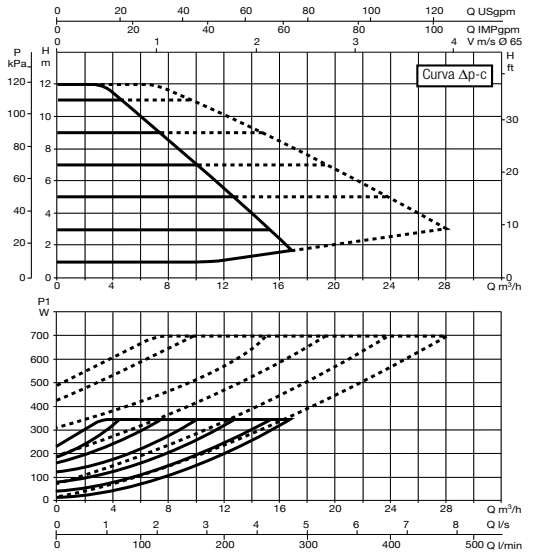

EVOPLUS D 40/220.40 M

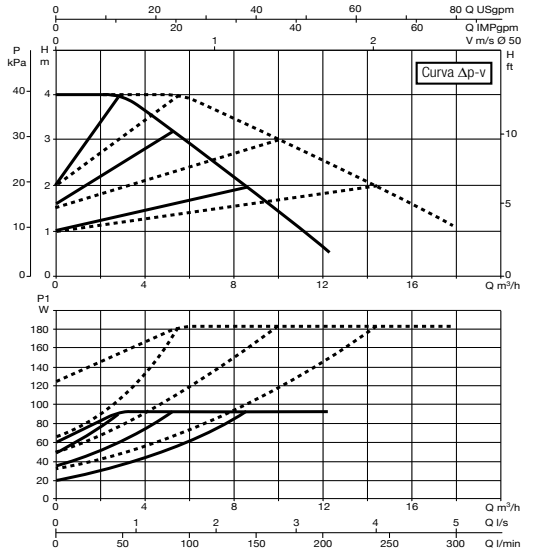

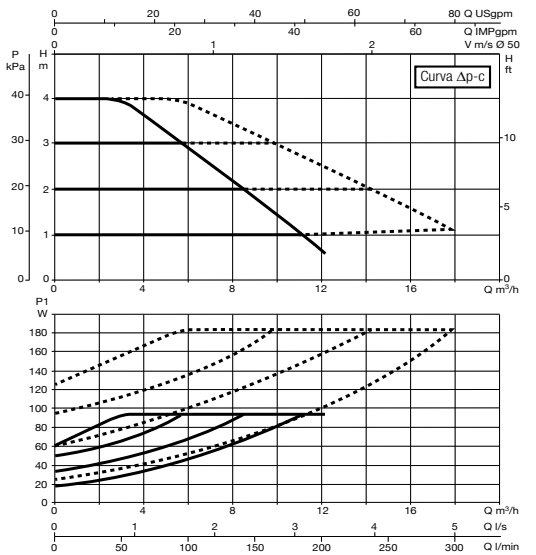

Curve tolerance according to ISO 9906.

EVOPLUS

RANGE PERFORMANCE

EVOPLUS D 60/220.40 M

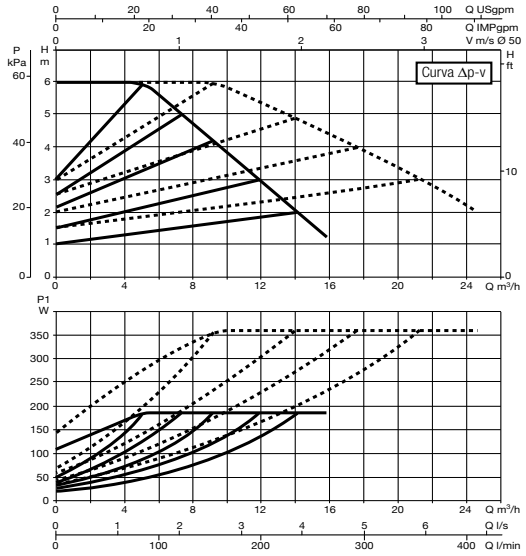

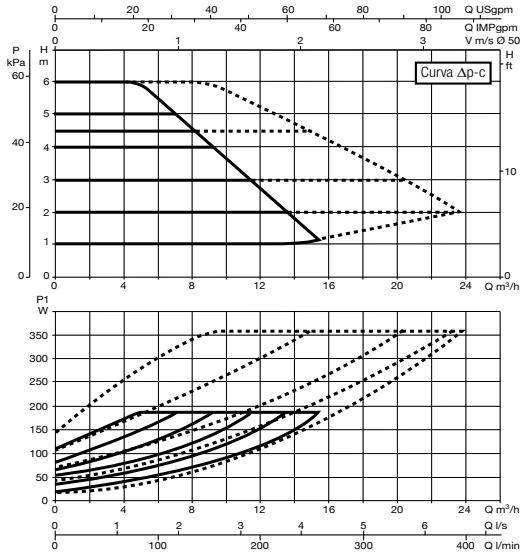

EVOPLUS D 80/220.40 M

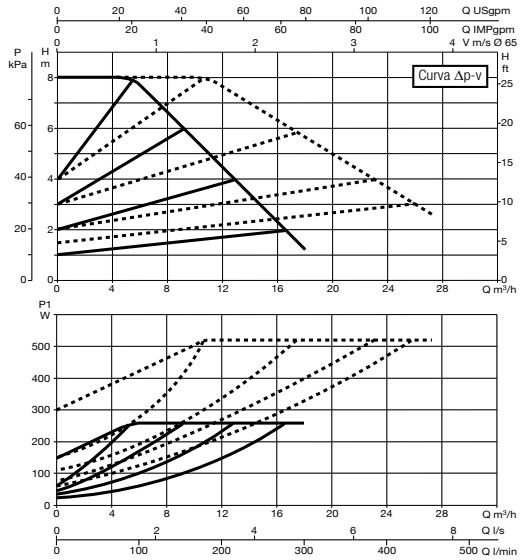

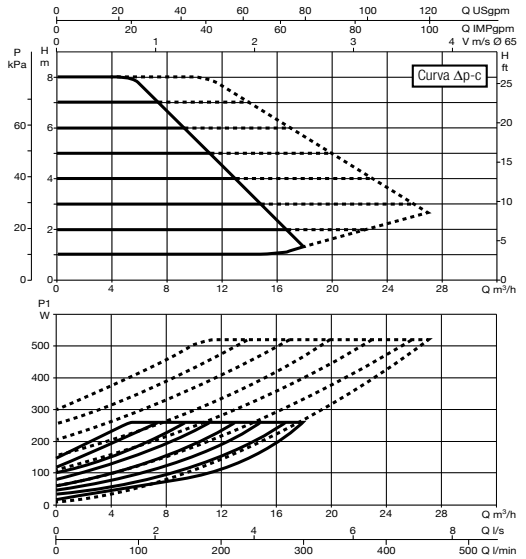

EVOPLUS D 100/220.40 M

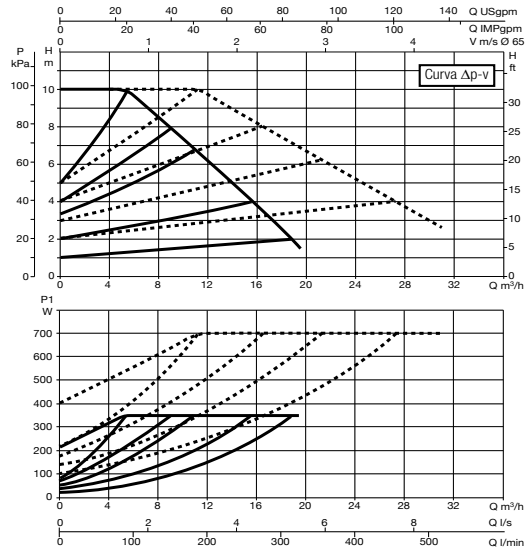

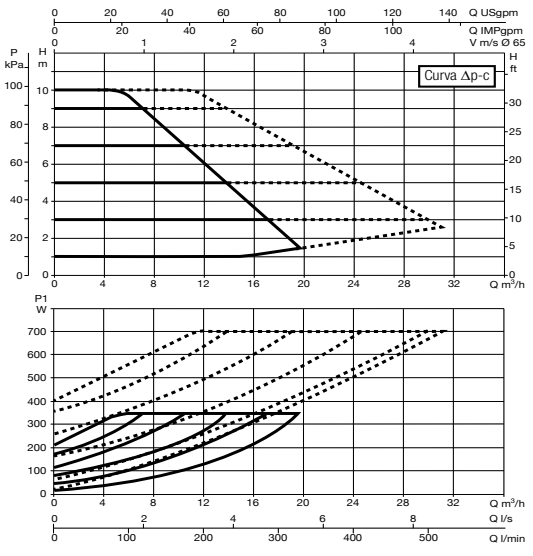

Curve tolerance according to ISO 9906.

EVOPLUS

RANGE PERFORMANCE

EVOPLUS D 120/250.40 M

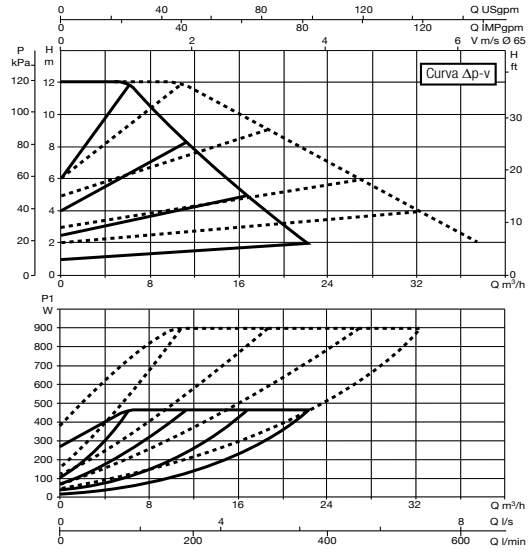

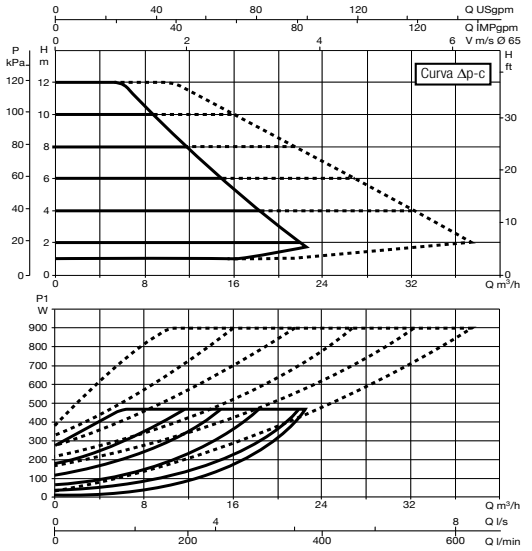

EVOPLUS D 150/250.40 M

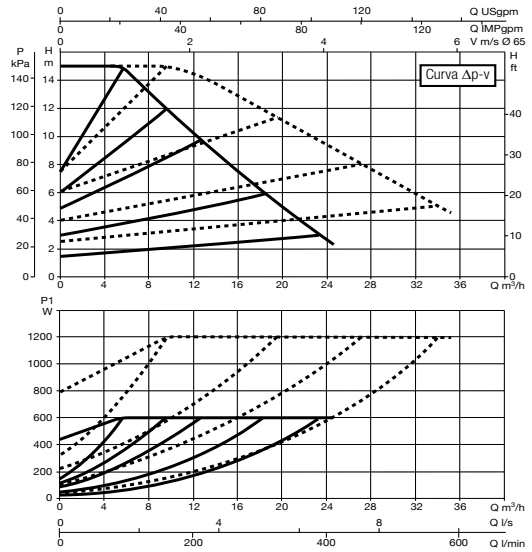

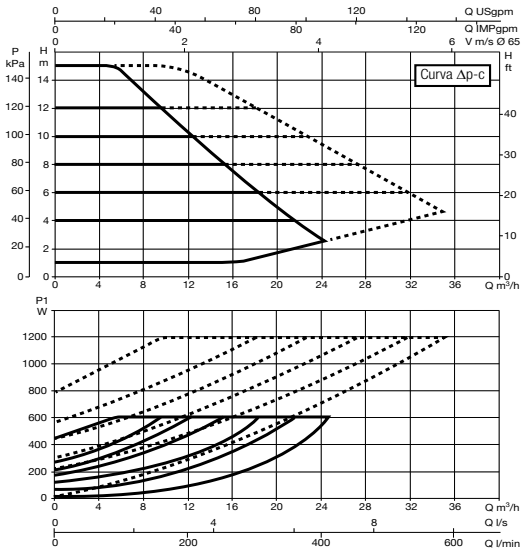

EVOPLUS D 180/250.40 M

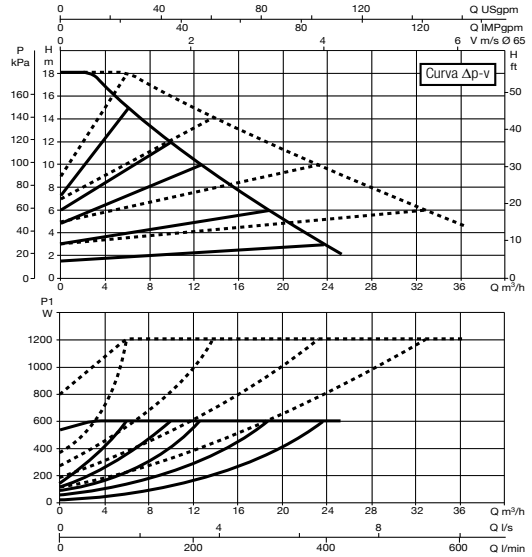

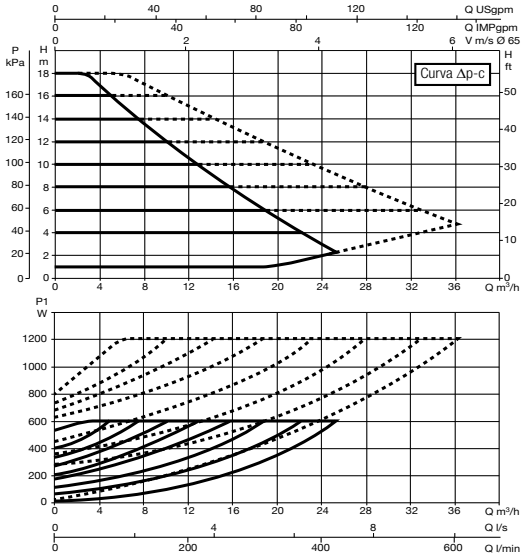

Curve tolerance according to ISO 9906.

EVOPLUS

RANGE PERFORMANCE

EVOPLUS D 40/240.50 M

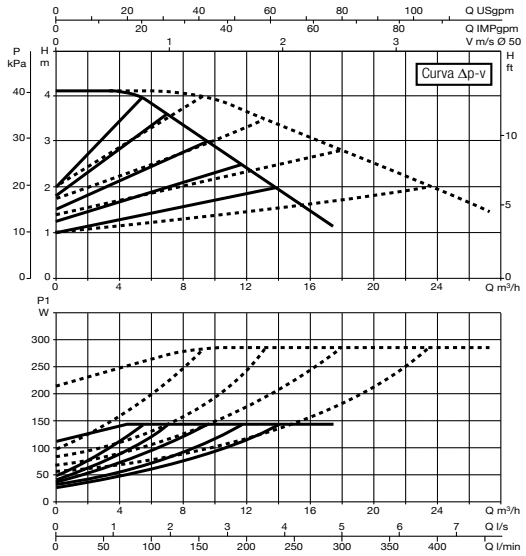

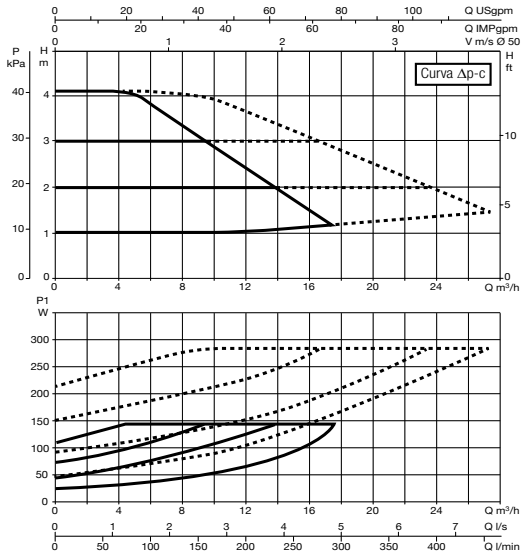

EVOPLUS D 60/240.50 M

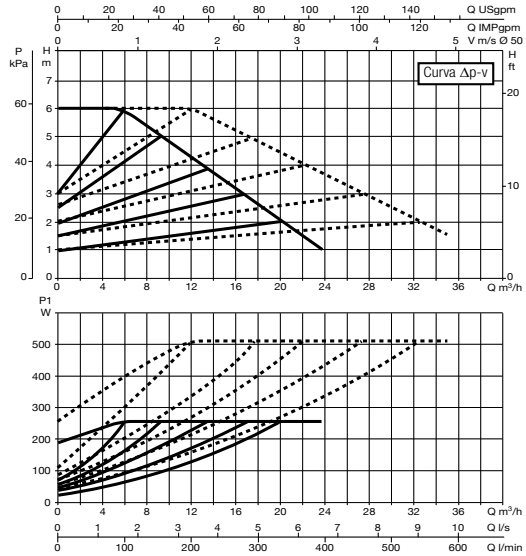

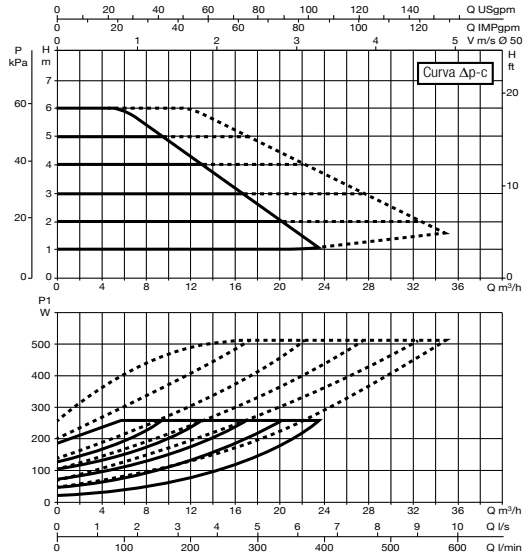

EVOPLUS D 80/240.50 M

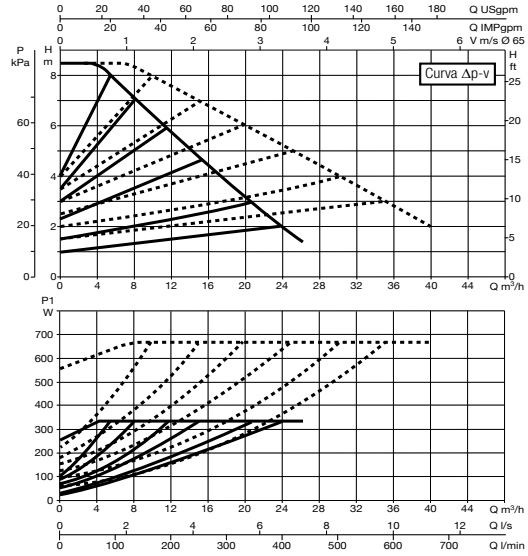

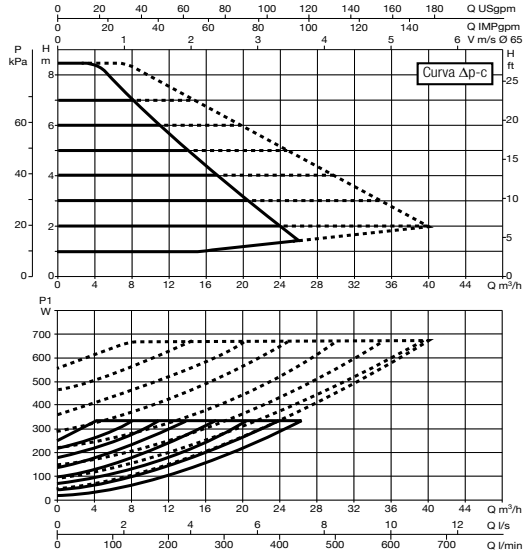

Curve tolerance according to ISO 9906.

EVOPLUS

RANGE PERFORMANCE

EVOPLUS D 100/280.50 M

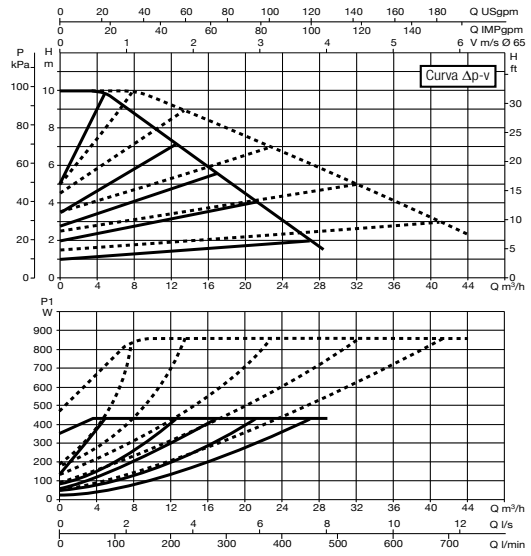

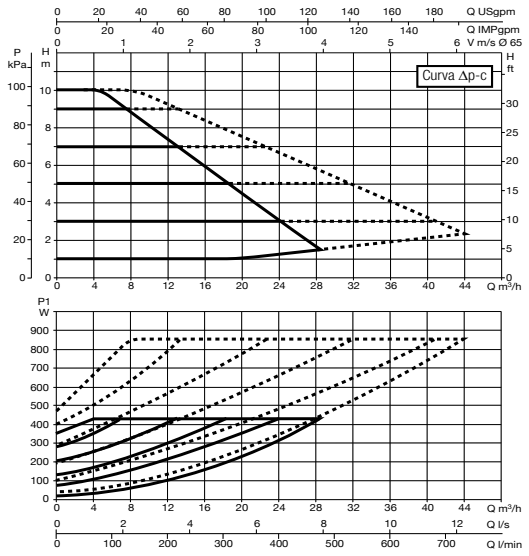

EVOPLUS D 120/280.50 M

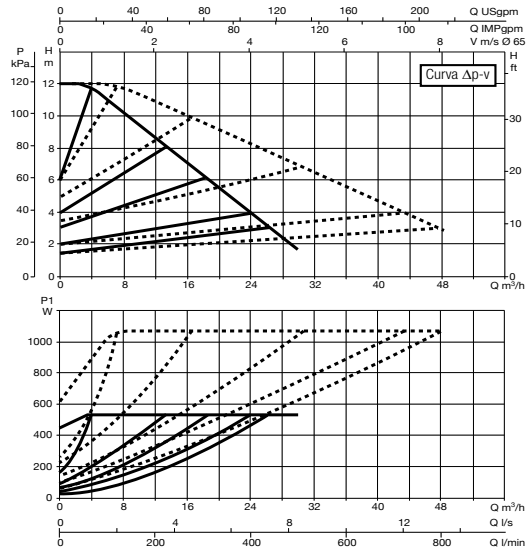

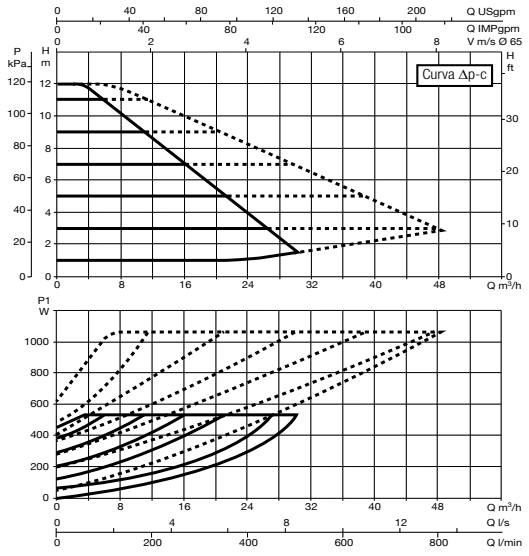

EVOPLUS D 150/280.50 M

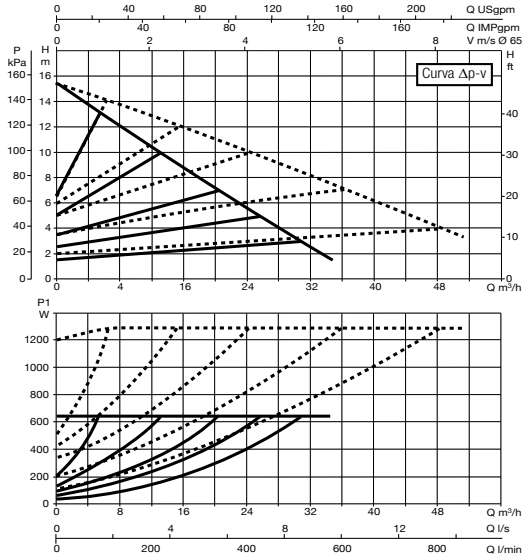

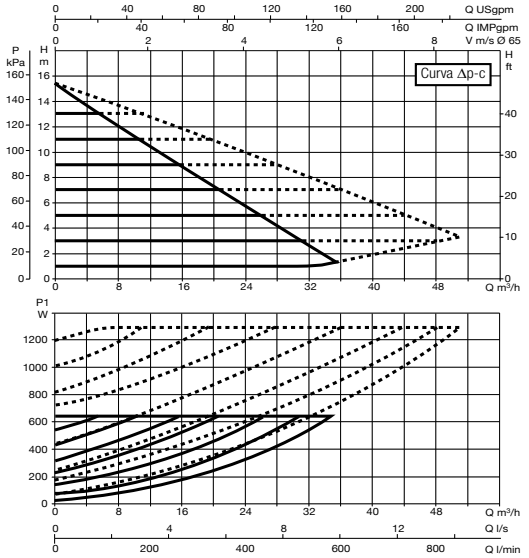

Curve tolerance according to ISO 9906.

EVOPLUS

RANGE PERFORMANCE

EVOPLUS D 180/280.50 M

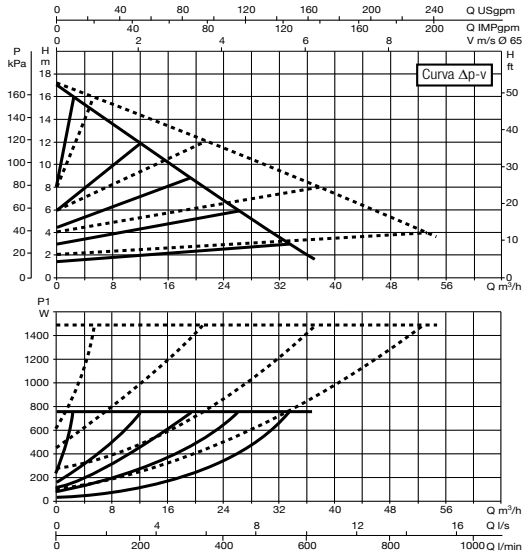

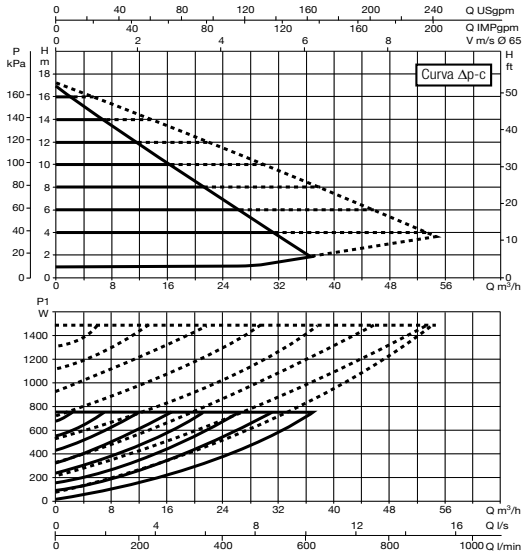

EVOPLUS D 40/340.65 M

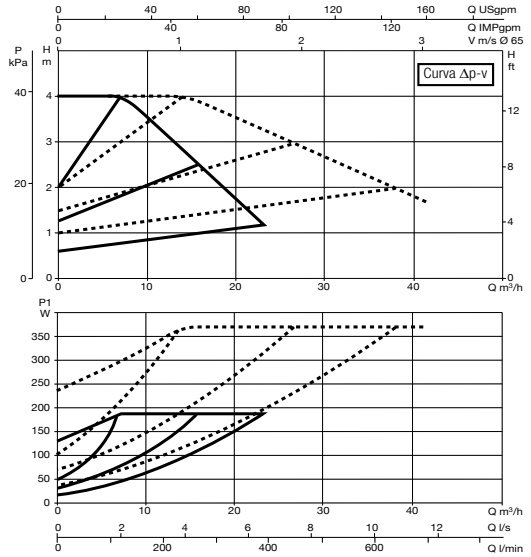

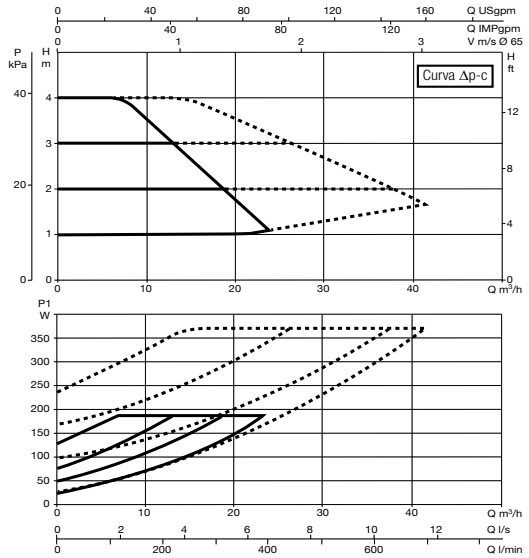

EVOPLUS D 60/340.65 M

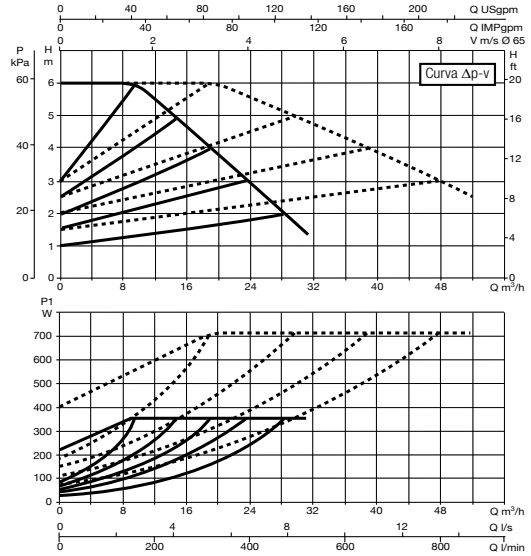

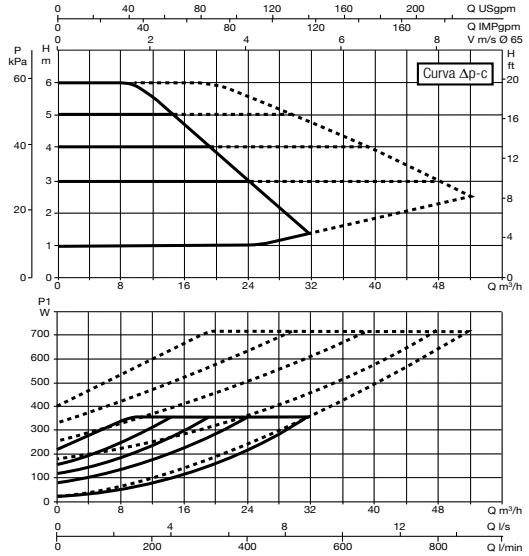

Curve tolerance according to ISO 9906.

EVOPLUS

RANGE PERFORMANCE

EVOPLUS D 80/340.65 M

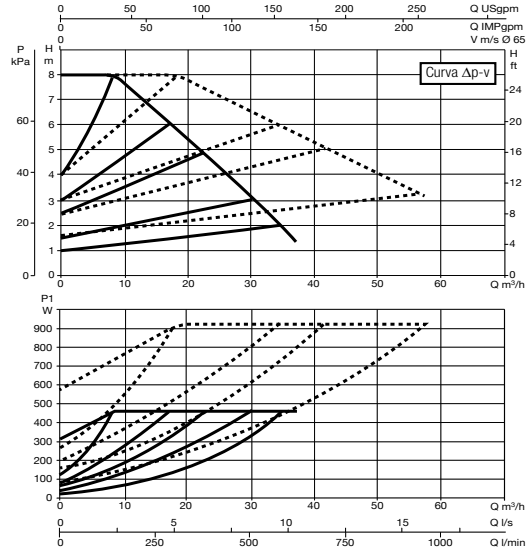

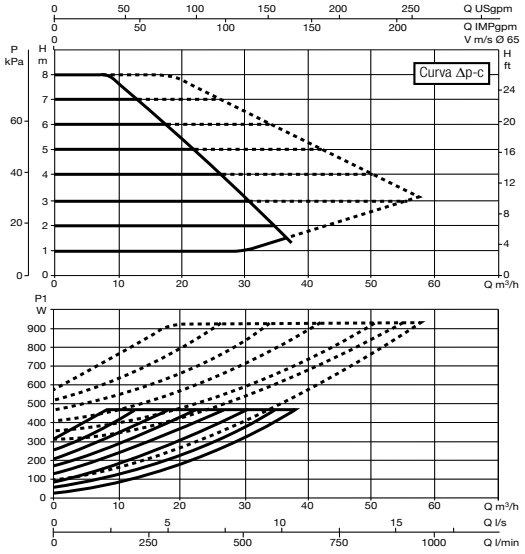

EVOPLUS D 100/340.65 M

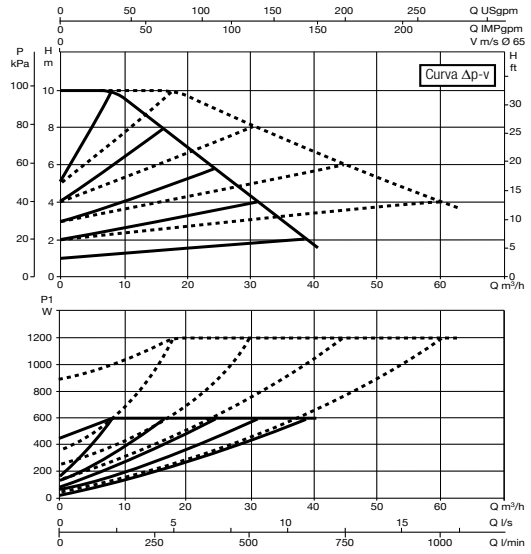

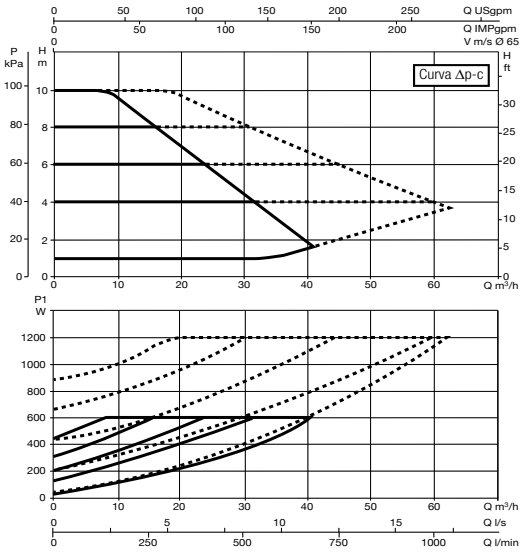

EVOPLUS D 120/340.65 M

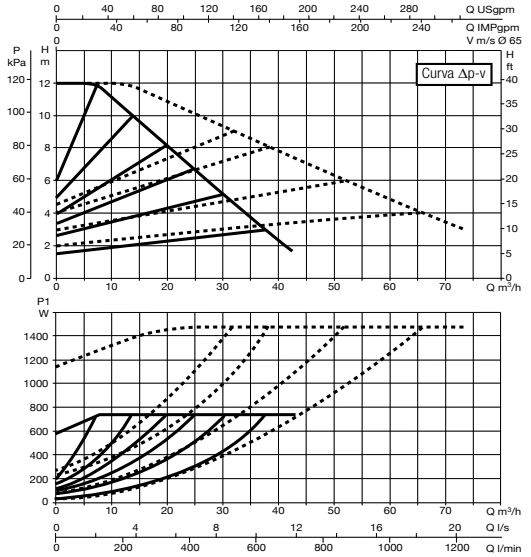

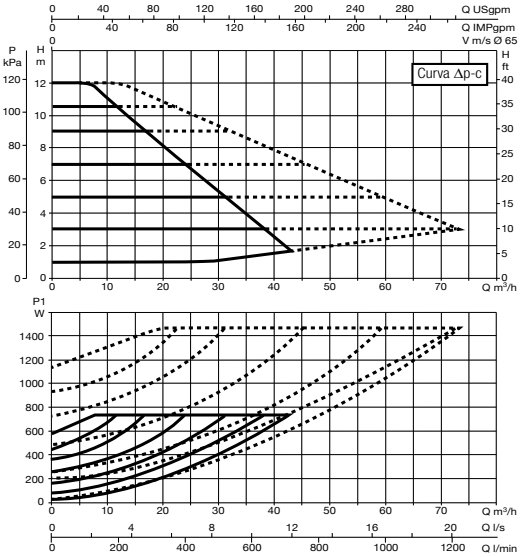

Curve tolerance according to ISO 9906.

EVOPLUS

RANGE PERFORMANCE

EVOPLUS D 150/340.65 M

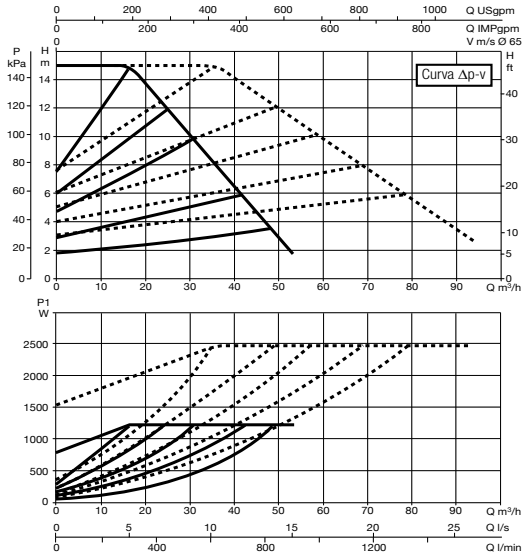

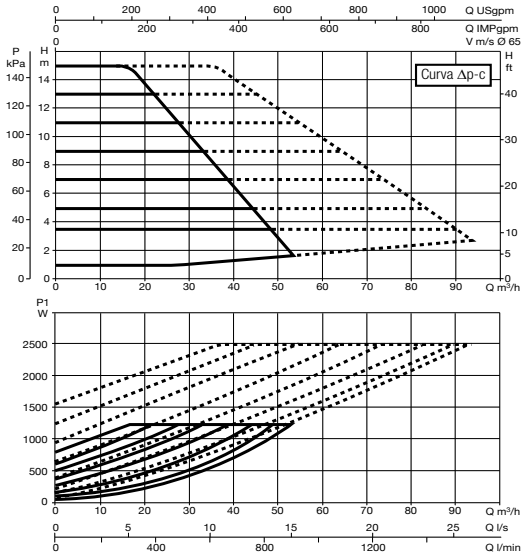

EVOPLUS D 40/360.80 M

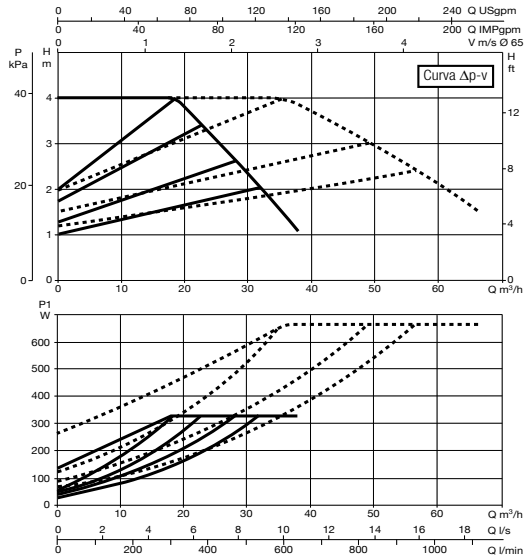

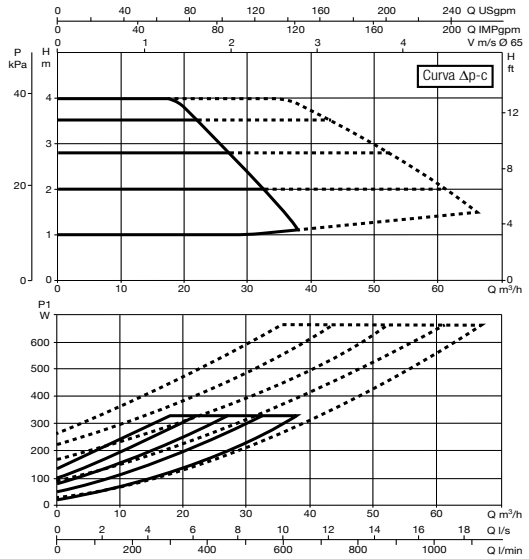

EVOPLUS D 60/360.80 M

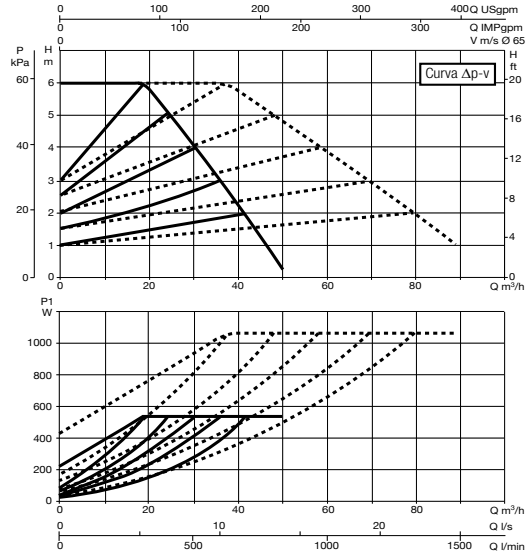

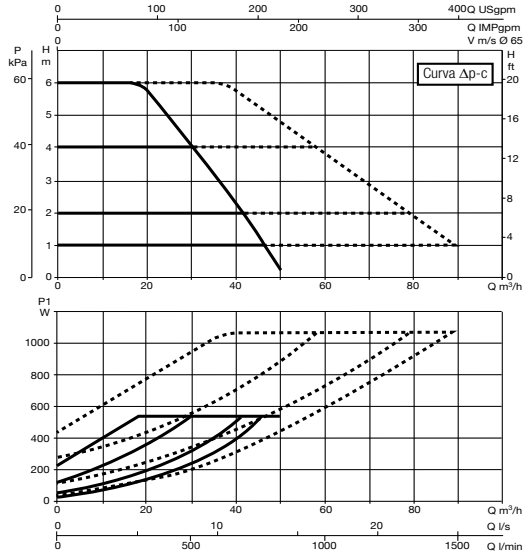

Curve tolerance according to ISO 9906.

EVOPLUS

RANGE PERFORMANCE

EVOPLUS D 80/360.80 M

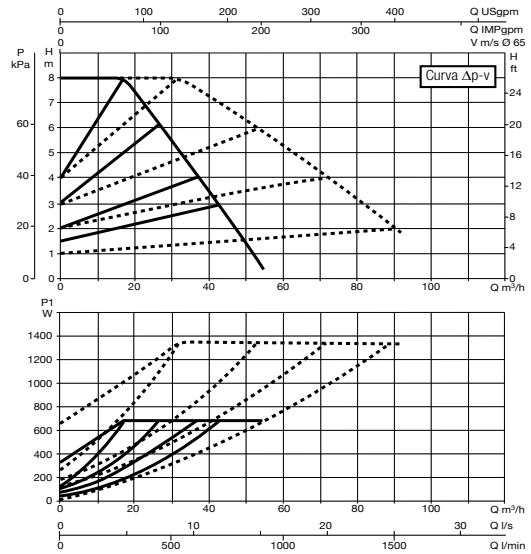

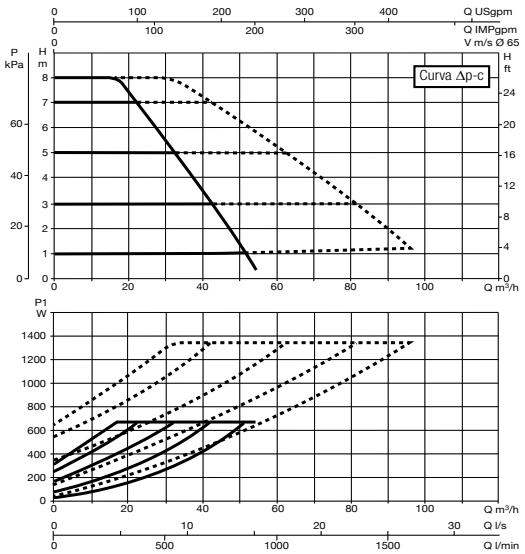

EVOPLUS D 100/360.80 M

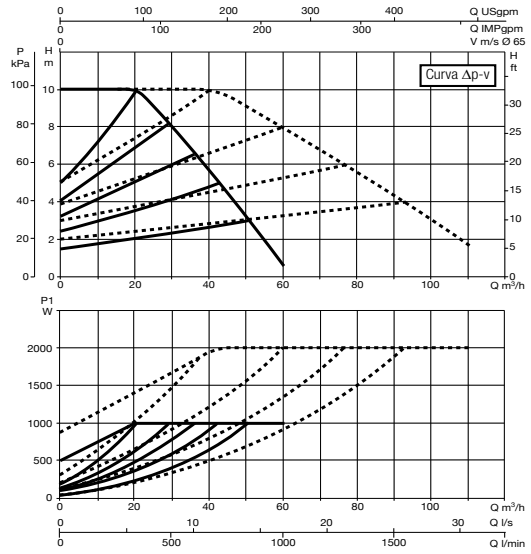

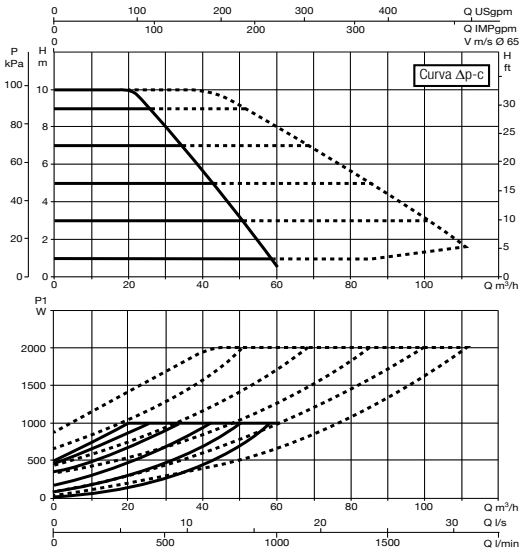

EVOPLUS D 120/360.80 M

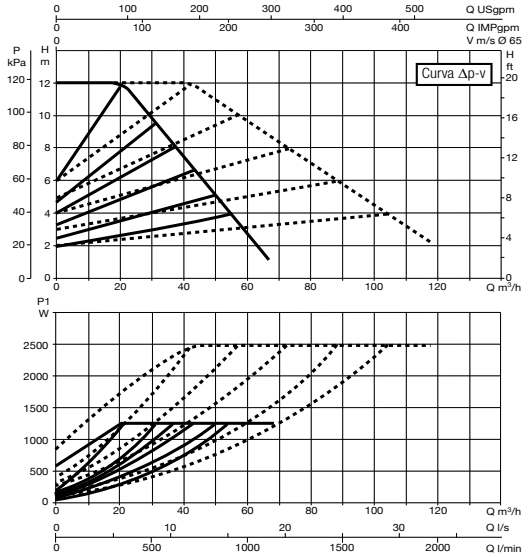

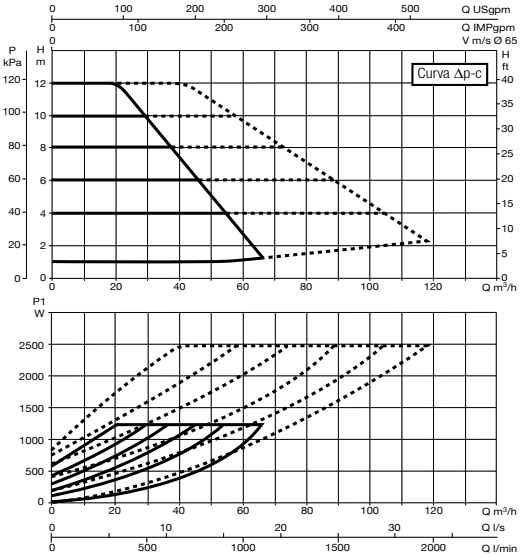

Curve tolerance according to ISO 9906.

EVOPLUS

RANGE PERFORMANCE

EVOPLUS D 40/450.100 M

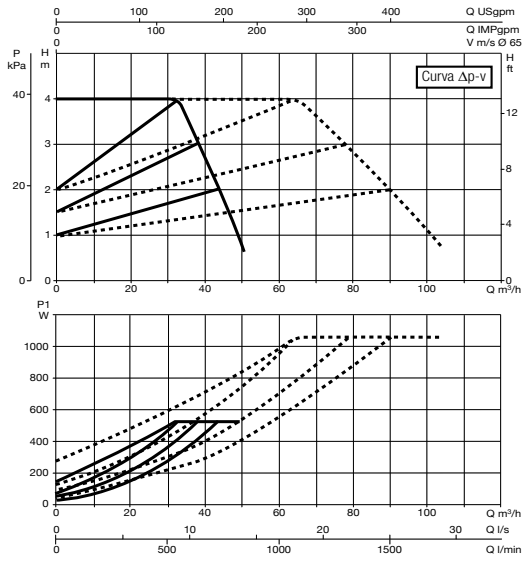

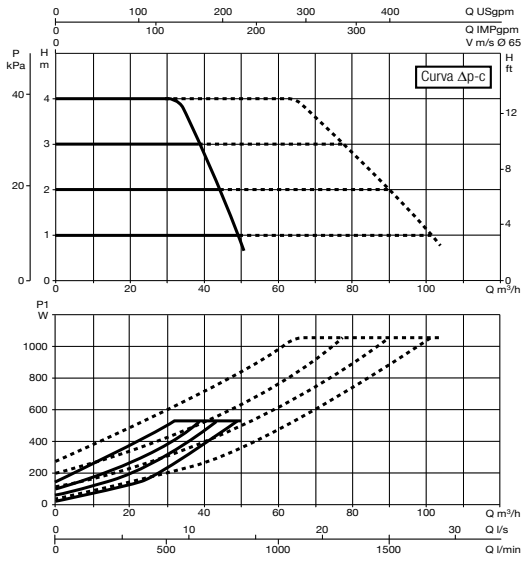

EVOPLUS D 60/450.100 M

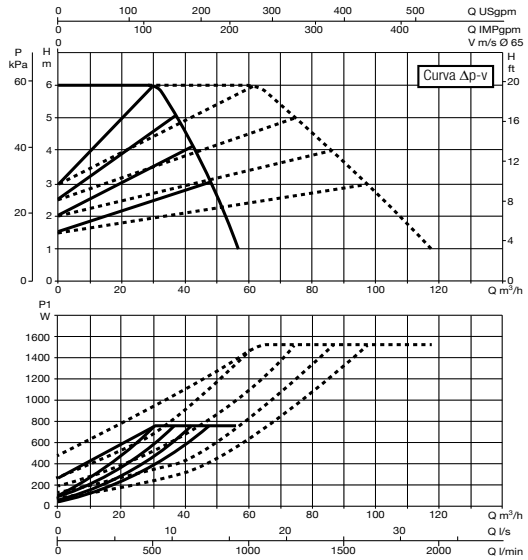

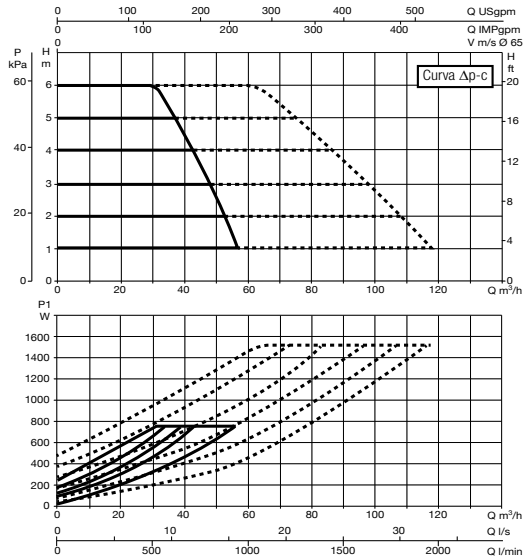

EVOPLUS D 80/450.100 M

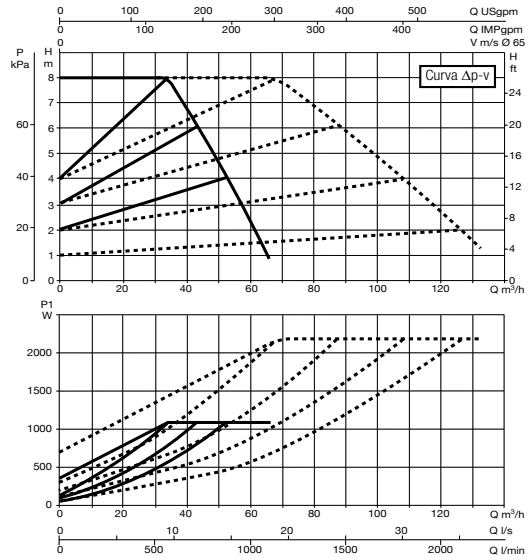

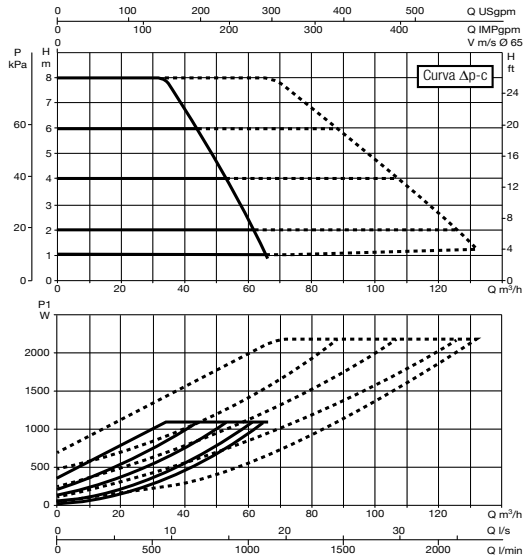

Curve tolerance according to ISO 9906.

EVOPLUS

RANGE PERFORMANCE

EVOPLUS D 100/450.100 M

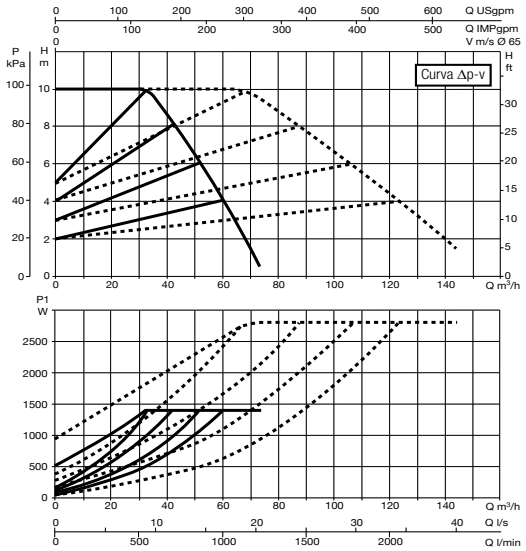

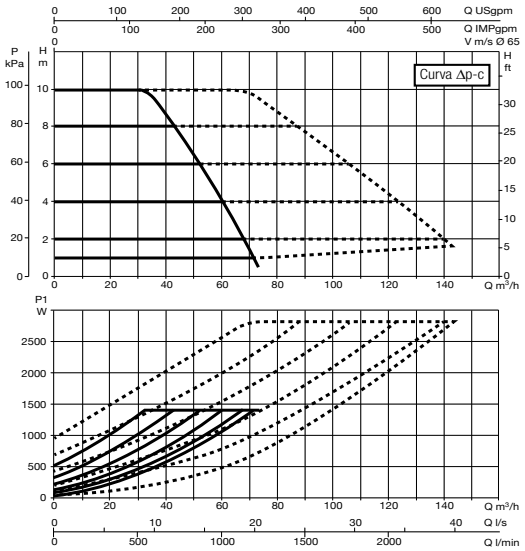

EVOPLUS D 120/450.100 M

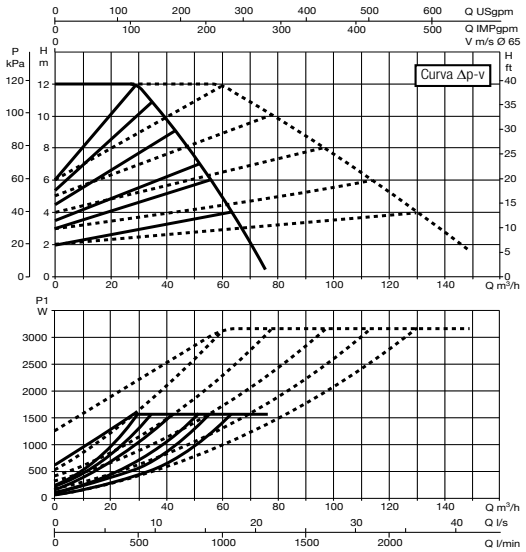

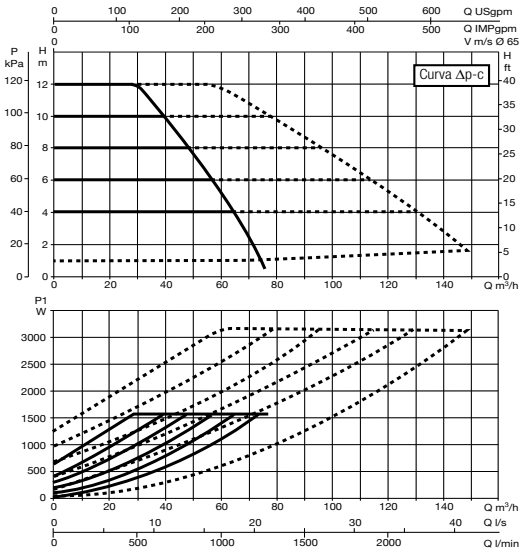

Curve tolerance according to ISO 9906.

EVOPLUS

CIRCULATORS FOR HEATING AND AIR-CONDITIONING SYSTEMS

DIMENSIONS AND WEIGHTS - *EVOPLUS B*

MODEL	units	L	L1	L2	A1	A2	B	B1	B2	D	D1	D2	D3	D4	H	H1	H2	WEIGHT	Q.TY x PALLET
EVOPLUS B 120/220.32 M	inch	8.7	4.3	4.3	0.7	0.6	16.4	3.7	12.7	5.5	3.9	3.5	3	1.4	8.7	8.7	10.7	30.9 lbs	16
	mm	220	110	110	19	14	417	94	323	140	100	90	76	36	222	220	273	14 Kg	
EVOPLUS B .../220.40 M	inch	8.7	4.3	4.3	0.7	0.6	16.5	3.7	12.8	5.9	4.3	3.9	3.3	1.7	8.7	8.7	10.7	34.2 lbs	16
	mm	220	110	110	19	14	419	93	326	150	110	100	84	42	222	220	273	15.5 Kg	
EVOPLUS B .../250.40 M	inch	9.8	4.9	4.9	0.7	0.6	16.5	3.7	12.8	5.9	4.3	3.9	3.3	1.7	9.1	8.7	10.7	35.3 lbs	16
	mm	250	125	125	19	14	419	93	326	150	110	100	84	42	230	220	273	16 Kg	
EVOPLUS B .../240.50 M	inch	9.4	4.7	4.7	0.7	0.6	16.3	3.4	12.8	6.5	4.9	4.3	3.9	2.1	8.7	8.7	10.7	37.5 lbs	16
	mm	240	120	120	19	14	413	87	325	165	125	110	99	53	222	220	273	17 Kg	
EVOPLUS B .../280.50 M	inch	11	5.5	5.5	0.7	0.6	16.3	3.4	12.8	6.5	4.9	4.3	3.9	2.1	9.1	8.7	10.7	39.7 lbs	16
	mm	280	140	140	19	14	413	87	325	165	125	110	99	53	230	220	273	18 Kg	
EVOPLUS B .../340.65 M	inch	13.4	6.7	6.7	0.7	0.6	17.4	4.3	13.1	7.3	5.7	5.1	4.6	2.7	11	8.7	10.7	44.1 lbs	8
	mm	340	170	170	19	14	443	110	333	185	145	130	118	69	280	220	273	20 Kg	
EVOPLUS B .../360.80 M	inch	14.2	7.1	7.1	0.7	-	17.6	4.2	13.4	7.9	6.3	-	5.2	3.1	11	8.7	10.7	55.1 lbs	8
	mm	360	180	180	19	-	446	106	340	200	160	-	132	80	279	220	273	25 Kg	
EVOPLUS B .../450.100 M	inch	17.7	8.9	8.9	0.7	-	18.2	4.3	13.9	8.7	7.1	-	6.1	4.1	11.5	8.7	10.7	66.1 lbs	4
	mm	450	225	225	19	-	463	110	353	220	180	-	156	105	292	220	273	30 Kg	

EVOPLUS D

MODEL	units	L	L1	L2	A1	A2	B	B1	B2	D	D1	D2	D3	D4	I	I1	I2	I3	M	H	H1	H2	H3	H4	WEIGHT	Q.TY x PALLET
EVOPLUS D 120/220.32 M	inch	8.7	-	-	0.7	0.6	15.4	2.7	12.7	5.5	3.9	3.5	3	1.4	5.1	5.1	3.8	1.6	M12	16.5	18.9	12.7	8.2	8.3	63.9 lbs	4
	mm	220	-	-	19	14	391	68	323	140	100	90	76	36	130	130	97	40	M12	419	480	323	209	210	29 Kg	
EVOPLUS D .../220.40 M	inch	8.7	-	-	0.7	0.6	17.2	3	14.2	5.9	4.3	3.9	3.3	1.7	5.1	5.1	2.1	3.1	M12	17.2	18.9	11.3	8.6	8.6	68.3 lbs	4
	mm	220	-	-	19	14	436	75	361	150	110	100	84	42	130	130	53	80	M12	438	480	288	219	218	31 Kg	
EVOPLUS D .../250.40 M	inch	9.8	-	-	0.7	0.6	15.6	2.7	12.8	5.9	4.3	3.9	3.3	1.7	5.1	5.1	2.3	3.2	M12	17.9	18.9	10.8	9	8.9	70.5 lbs	4
	mm	250	-	-	19	14	395	69	326	150	110	100	84	42	130	130	58	81	M12	454	480	274	228	226	32 Kg	
EVOPLUS D .../240.50 M	inch	9.4	-	-	0.7	0.6	15.7	3	12.8	6.5	4.9	4.3	3.9	2.1	5.1	5.1	1.9	4.5	M12	18.2	18.9	12.5	9.2	9.1	72.8 lbs	4
	mm	240	-	-	19	14	400	75	325	165	125	110	99	53	130	130	48	115	M12	463	480	318	233	230	33 Kg	
EVOPLUS D .../280.50 M	inch	11	-	-	0.7	0.6	15.7	3	12.8	6.5	4.9	4.3	3.9	2.1	5.1	5.1	4.9	2	M12	18.4	18.9	10.7	9.3	9.1	75 lbs	4
	mm	280	-	-	19	14	400	75	325	165	125	110	99	53	130	130	125	50	M12	467	480	273	235	232	34 Kg	
EVOPLUS D .../340.65 M	inch	13.4	7.9	5.5	0.7	0.6	16.2	3	13.1	7.3	5.7	5.1	4.6	2.7	5.1	5.1	6.7	1.9	M12	19.1	18.9	10.7	9.8	9.3	81.6 lbs	4
	mm	340	200	140	19	14	411	77	334	185	145	130	118	69	130	130	170	48	M12	484	480	273	248	236	37 Kg	
EVOPLUS D .../360.80 M	inch	14.2	7.9	6.3	0.7	-	17.2	3.8	13.4	7.9	6.3	-	5.2	3.1	5.1	5.1	6.3	2.3	M12	20.3	18.9	10.7	10.3	10	97 lbs	4
	mm	360	200	160	19	-	437	96	341	200	160	-	132	80	130	130	160	58	M12	515	480	273	262	253	44 Kg	
EVOPLUS D .../450.100 M	inch	17.7	10.2	7.5	0.7	-	18	4.1	13.9	8.7	7.1	-	6.1	4.1	5.3	5.3	7.9	1.7	M12	20.4	19.3	10.7	10.4	9.9	116.8 lbs	4
	mm	450	260	190	19	-	456	103	353	220	180	-	156	105	135	135	200	43	M12	517	490	273	265	252	53 Kg	

EVOPLUS B

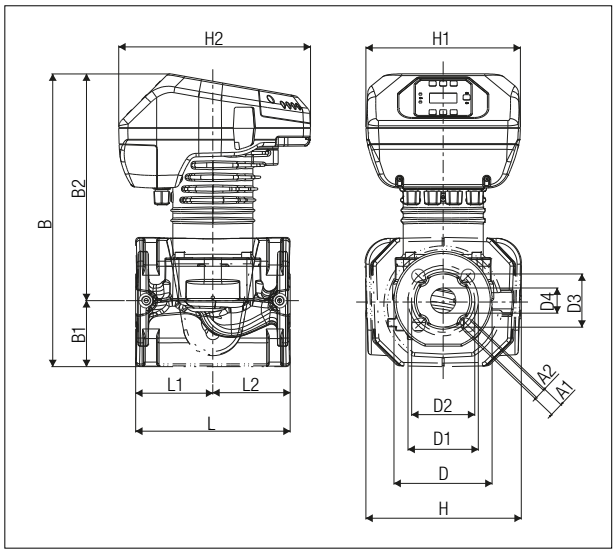

EVOPLUS D

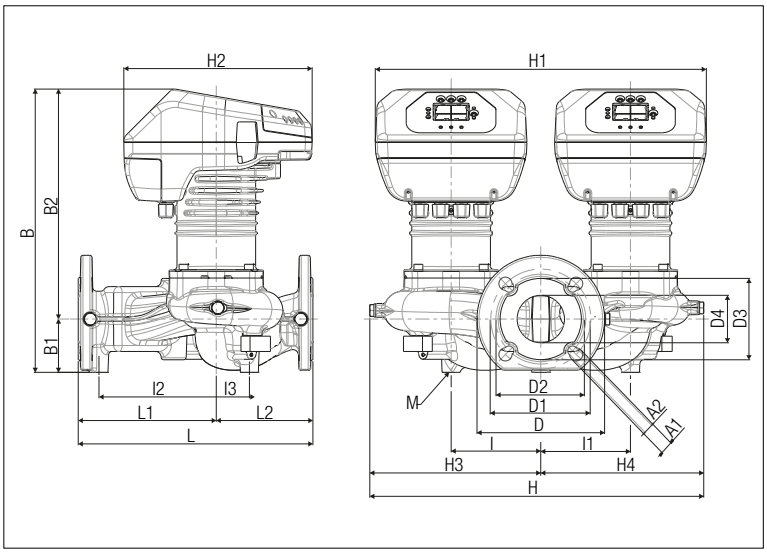

DAB PUMPS reserves the right to make modifications without notice

NOTES

ACCESSORIES HVAC

ACCESSORIES

CIRCULATORS AND IN-LINE PUMPS

BLANK FLANGE KIT	DESCRIPTION	CODE	MODEL	WEIGHT lbs
	**BLANK FLANGE KIT - EVOPLUS S** (std. feature in the twin version)	60153741	**EVOPLUS SMALL**	10.4
	DN 32 PN 10 AISI 304 BLANK FLANGE KIT EVOPLUS M&L (std. feature in the twin version)	60164747	**EVOPLUS MEDIUM & LARGE SAN**	10.4

REMOTE CONTROL MODULE	DESCRIPTION	CODE	MODEL	WEIGHT lbs
 **EVOPLUS SMALL MULTI-FUNCTION MODULE**	**EVOPLUS SMALL BASIC MODULE**	60152883	**EVOPLUS SMALL (All models)** **EVOPLUS SMALL SAN (All models)**	1.1
	EVOPLUS SMALL MULTI-FUNCTION MODULE	60152884	**EVOPLUS SMALL (All models)** **EVOPLUS SMALL SAN (All models)** **Supplied with Evoplus Small Twin models**	1.1
	EVOPLUS SMALL MULTI-FUNCTION MODULE SN > 2	60201084	**EVOPLUS SMALL (All models)** **EVOPLUS SMALL SAN (All models)** **Supplied with Evoplus Small Twin models**	1.1

BASIC MODULE

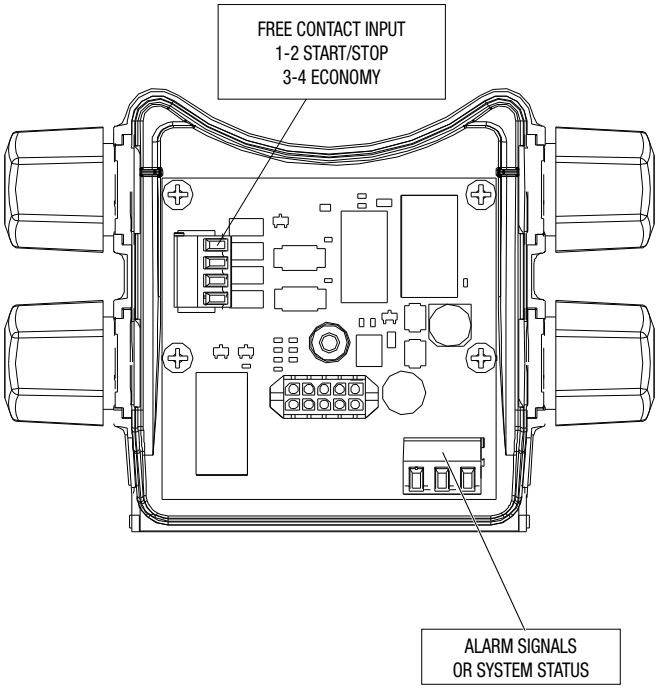

MULTI-FUNCTION MODULE

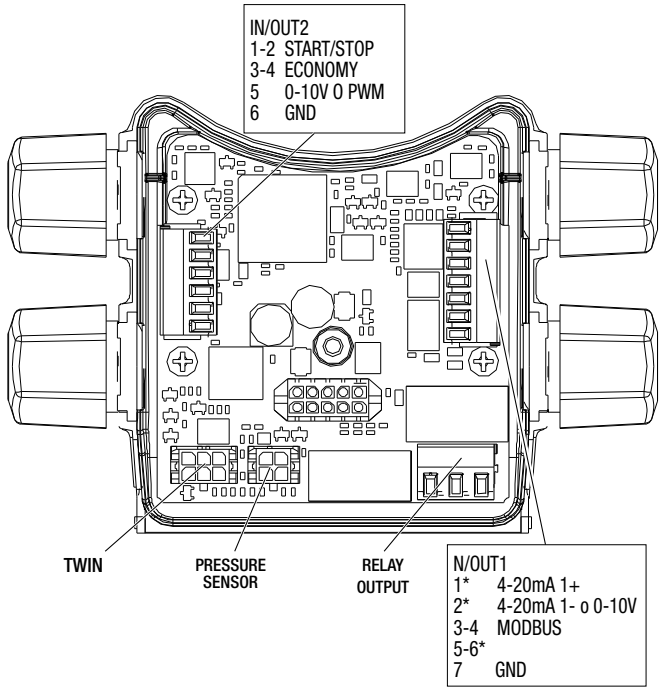

INDEX - SWIMMING POOL



ESWIM
ELECTRONIC SWIMMING POOL PUMPS

PAGE 198



EUROSWIM
SWIMMING POOL CENTRIFUGAL PUMPS

PAGE 201



EUROCOM SP - JETCOM SP
SWIMMING POOL CENTRIFUGAL PUMPS

PAGE 204

ACCESSORIES

PAGE 207

E.SWIM

ELECTRONIC SWIMMING POOL PUMPS



Electronic pumps with variable frequency drive for swimming pools and fish farms suitable for filtering salt or chlorine water in residential building service and commercial building service.
The pumps are quiet, programmable and equipped with a large inspectable pre-filter.
E.SWIM 150 and E.SWIM 150 SVRS have a 12-pin control card which makes them compatible with any control panel, both analog and digital. Lid of the pre-filter in transparent polycarbonate and in antioxidant material for an easy visual inspection. Permanent magnet synchronous motor, brushless. The motor is cooled by the pumped liquid, it is without cooling fan so the noise level is only 45 dB. Bayonet lid closure for E.SWIM, lid closure with wing screws for EPro. It is possible to remote control the pumps via 0-10 V, 4-20 mA and PWM signal.
Thanks to the variable frequency drive, the pumps can operate at constant speed or with constant flow (without the use of sensors) to optimize performance and minimize energy consumption. The control panel has 4 buttons with 8 programmable speeds and status and alarm signaling LEDs. There is a menu for weekly and seasonal programming. The SVRS version is equipped with a software function that disables pump suction if an obstruction is detected. "SVRS" is an acronym that means Safety Vacuum Release Systems.

Flow rate maximum
150 versions: 140.9 gpm (32 m^3/h)
300 versions: 187.6 gpm (42.6 m^3/h)

Head up to
150 versions: 52 ft (16 m)
300 versions: 85 ft (26 m)

Type of pumped liquid clean or slightly dirty water with suspended solid bodies, long fibers; particularly aggressive water with high percentages of chlorine / bromine and PHMB (Polyhexamethylene Biguanide) or water treated with chlorine electrolysis process

PH RANGE 6.5 - 8.4

Max. supported liquid temperature +104°F (40°C)

Maximum ambient temperature +122°F (50°C)

Maximum operating pressure bar / kPa
150 versions: 36 psi (2.5 bar)
300 versions: 41 psi (2.8 bar)

Class of protection
150 versions: IP 55
300 versions: IP 56

Motor insulation class F

Impeller/s material techopolimer

SUITABLE ALSO FOR SALT WATER · ENERGY STAR · NSF Certified to NSF/ANSI Standard 50 · 40 dB · C SP US

ACCESSORIES PAG. 217

TECHNICAL DATA

MODEL	CODE	ELECTRICAL DATA					HYDRAULIC DATA									DNA NPT	DNM NPT	WEIGHT
		VOLTAGE 60 Hz	P1 MAX kW	P2 NOMINAL		In A	Q=GPM	0	26.4	52.8	79.2	92.4	105.6	118.8	132			
							Q=l/min	0	100	200	300	350	400	450	500			
E.SWIM 150	60195697	230 V	1.25	1.1	1.5	5.6	H (ft)	52	52	47	40	36	31	26	21	2"	2"	41.9 lbs
							H (m)	15.9	15.7	14.4	12.2	10.9	9.4	7.9	6.3			19 Kg
E.SWIM 150 SVRS	60195698	230 V	1.25	1.1	1.5	5,6	H (ft)	52	52	47	40	36	31	26	21	2"	2"	41.9 lbs
							H (m)	15.9	15.7	14.4	12.2	10.9	9.4	7.9	6.3			19 Kg

MODEL	CODE	ELECTRICAL DATA					HYDRAULIC DATA										DNA NPT	DNM NPT	WEIGHT
		VOLTAGE 60 Hz	P1 MAX kW	P2 NOMINAL		In A	Q=GPM	0	22	44	66	88	110	132	154	176	187.4			
							Q=l/min	0	83	166	250	333	416	500	583	666	710			
E.SWIM 300	60198411	230 V	2.25	1.9	2.6	10	H (ft)	85	83	81	76	68	57	47	38	26	20	2"	2"	47 lbs
							H (m)	26	25.4	24.8	23.2	20.6	17.4	14.4	11.5	7.8	6			21.3 Kg

E.SWIM

ELECTRONIC SWIMMING POOL PUMPS

RANGE PERFORMANCE

E.SWIM 150

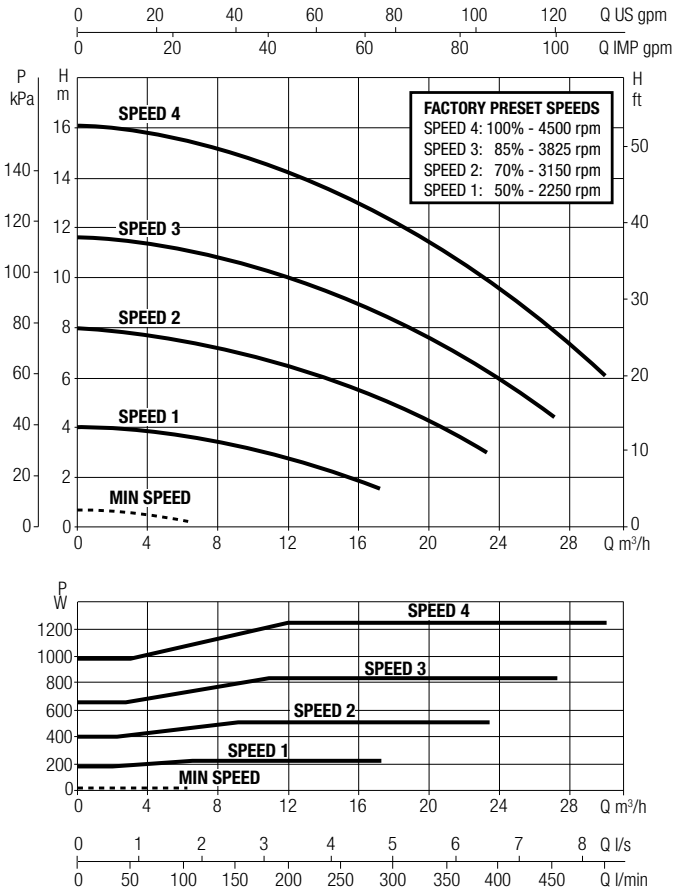

E.SWIM 300

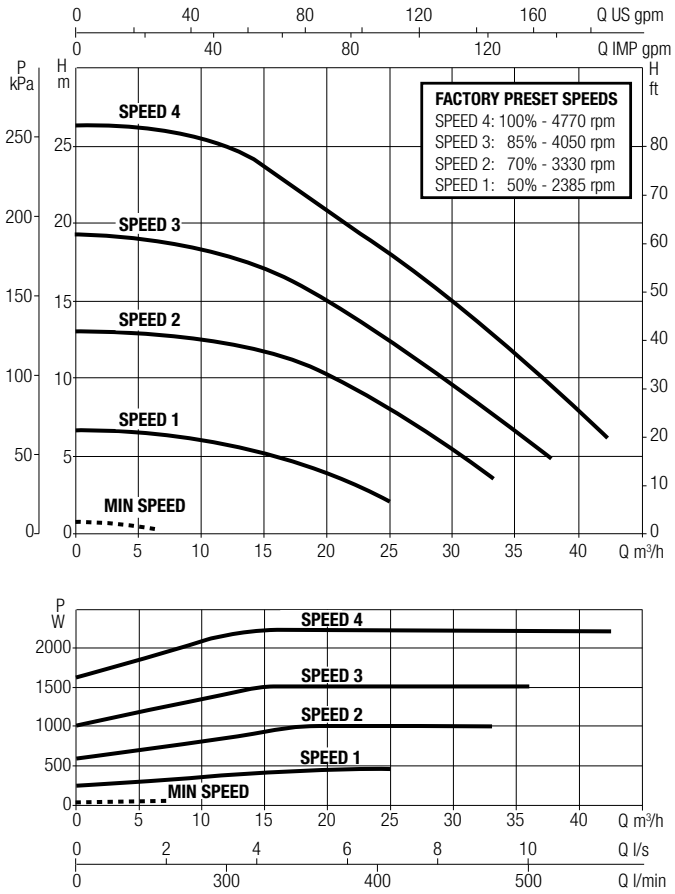

E.SWIM

ELECTRONIC SWIMMING POOL PUMPS

DIMENSIONS AND WEIGHTS

E.SWIM 150-300

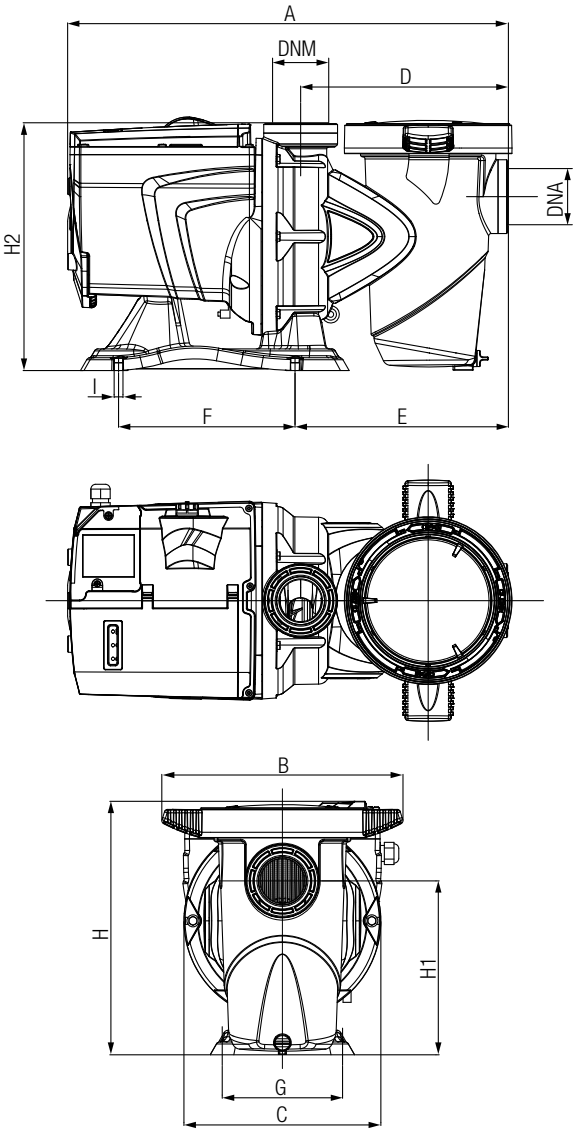

MODEL	units	A	B	C	D	E	F	G	H	H1	H2	I	DNA	DNM	PACKING DIMENSIONS			WEIGHT	Q.TY x PALLET
															L/A	L/B	H		
E.SWIM 150	inch	21.7	11.8	9.6	10.2	10.5	8.7	5.9	12.4	8.5	12.2	0.4	2" F	2" F	28.3	13.8	16.9	41.9 lbs	8
	mm	550	300	245	259	266	220	150	316	217	309	11			720	350	430	19 Kg	
E.SWIM 150 SVRS	inch	21.7	11.8	9.6	10.2	10.5	8.7	5.9	12.4	8.5	12.2	0.4	2" F	2" F	28.3	13.8	16.9	41.9 lbs	8
	mm	550	300	245	259	266	220	150	316	217	309	11			720	350	430	19 Kg	
E.SWIM 300	inch	22.6	12	11.4	10.6	10.9	8.7	5.9	13.9	9.9	13.5	0.4	2" F	2" F	28.3	13.8	16.9	47 lbs	6
	mm	574	304	290	269	276	220	150	354	252	344	11			720	350	430	21.3 Kg	

DAB PUMPS reserves the right to make modifications without notice

EUROSWIM

SWIMMING POOL CENTRIFUGAL PUMPS



High efficiency self-priming centrifugal pumps with built-in large capacity prefilter. Extremely quiet running and great reliability, developed for water circulation and filtration in domestic and residential swimming pools. Suitable also for special applications that call for handling of aggressive liquids, in fish farms, agriculture and industry. Pump body in fibreglass reinforced technopolymer. Strainer cover in clear antioxidant polycarbonate to guarantee constant visibility through time. Nylon strainer. Impeller in fibre-glass reinforced technopolymer developed to ensure total coverage and isolation of the motor shaft from the pumped liquid. Diffuser in reinforced technopolymer. Mechanical seal in carbon / alumina / NBR / AISI 316. Pump body O-rings in NBR, threaded fasteners and re-inforcing rings in AISI 304. Butterfly drain plugs that can be removed and refitted without tools.
Asynchronous continuous duty 2-pole motor (S1) with generous range of power ratings from 0.5 HP to 3 HP, single phase and three-phase (see technical specifications). Motor casing in die cast aluminium with electrophoresic surface treatment to prevent oxidation even in aggressive environmental conditions. Baseplate supplied as standard with rubber mounts to reduce vibration transmission.
Single phase version with integral thermal and over-current protection and permanent split capacitor (PSC), assembled inside the terminal box for all versions.

Motor and terminal box protection rating IPX5

Insulation class F

Ball bearings
water-proof, sealed, resistant to water and humidity. Motor construction to EN 60335-2-41 standards

Operating range
up to 184.9 gpm (42 m^3/h) with pressure head of up to 72 ft (22 m)

Pumped fluid clean water or water slightly contaminated with suspended particulate, long fibre; highly aggressive water with high percentage contents of chlorine/bromine and PHMB (Polyhexamethylene Biguanide) or water treated with chlorine electrolytic process

Liquid temperature range up to +140°F (60°C)

Maximum ambient temperature +122°F (50°C)

Maximum operating pressure 36 psi (2.5 bar)

Installation fixed or portable in horizontal position

Special versions on request
alternative voltages and/or frequencies

Reference standard IEC – 60364

C US

TECHNICAL DATA

MODEL	CODE	ELECTRICAL DATA							MAX NOISE LEVEL dB (A)
		VOLTAGE 60 Hz	P1 MAX W	P2 NOMINAL		In A	CAPACITOR		
				kW	HP		µF	Vc	
EUROSWIM 50 M	60185775	1 x 115-230 V~	1.03	0.33	0.5	4.2	16	450	64
EUROSWIM 75 M	60185776	1 x 115-230 V~	1.23	0.5	0.75	5	20	450	65
EUROSWIM 100 M	60185777	1 x 115-230 V~	1.33	0.75	1	6.3	25	450	66
EUROSWIM 150 M	60185778	1 x 208-230 V~	1.7	1	1.5	7	31.5	450	66
EUROSWIM 200 M	60185779	1 x 208-230 V~	2.15	1.5	2	8.6	40	450	67
EUROSWIM 300 M	60185780	1 x 208-230 V~	3	2.2	3	12	–	–	67
EUROSWIM 75 T	60185781	3 x 220-277/380-480 V~	1.07	0.5	0.75	3.5 / 2	-	-	65
EUROSWIM 100 T	60185782	3 x 220-277/380-480 V~	1.3	0.75	1	4 / 2.4	–	–	66
EUROSWIM 150 T	60185783	3 x 220-277/380-480 V~	1.63	1	1.5	5 /2 .9	–	–	66
EUROSWIM 200 T	60185784	3 x 220-277/380-480 V~	1.85	1.5	2	6 / 3.5	–	–	67
EUROSWIM 300 T	60185785	3 x 220-277/380-480 V~	3	2.2	3	8.7 / 5	–	–	67

EUROSWIM

SWIMMING POOL CENTRIFUGAL PUMPS

RANGE PERFORMANCE

EUROSWIM 50

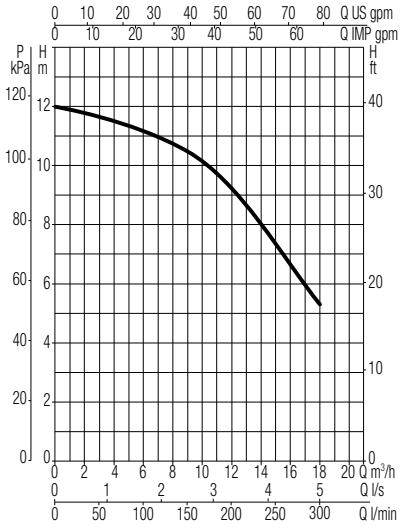

EUROSWIM 75

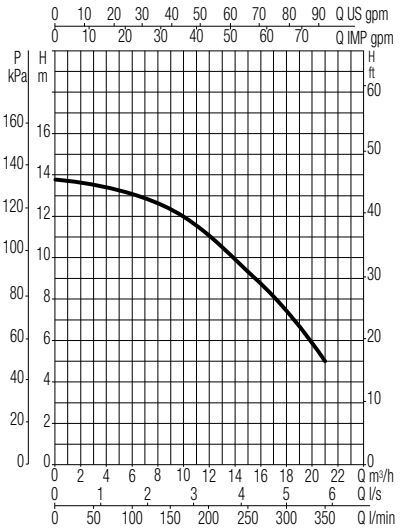

EUROSWIM 100

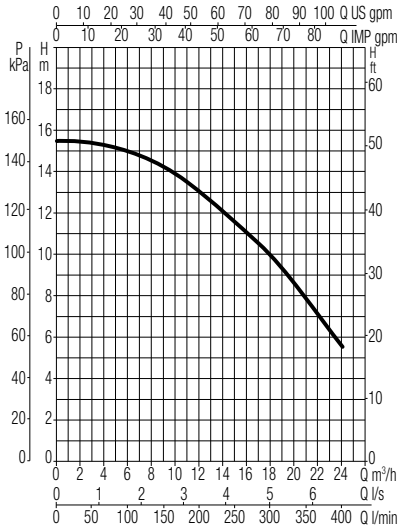

EUROSWIM 150

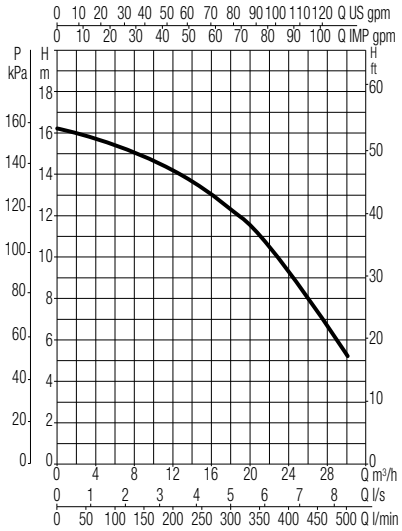

EUROSWIM 200

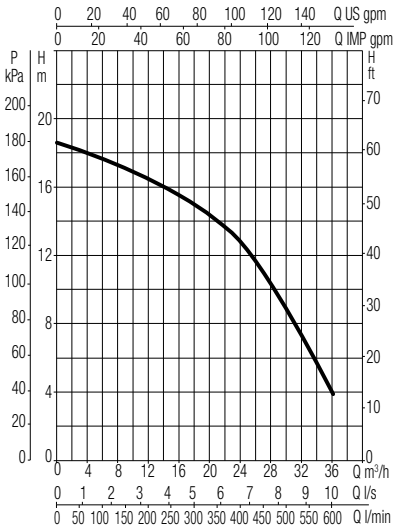

EUROSWIM 300

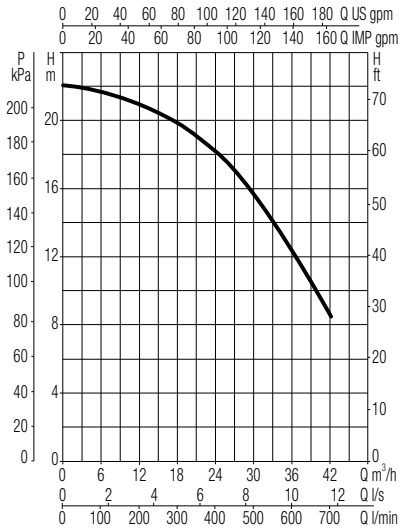

MODEL	P2 NOMINAL		Q=GPM	0	13.2	26.4	39.6	52.8	79.2	92.4	105.6	132	158.4	184.8
	kW	HP	Q=l/min	0	50	100	150	200	300	350	400	500	600	700
EUROSWIM 50 M	0.33	0.5	H (ft)	39	38	37	34	31	17					
			H (m)	12.0	11.7	11.2	10.5	9.3	5.3					
EUROSWIM 75 M -T	0.5	0.75	H (ft)	45	44	43	41	36	25	16				
			H (m)	13.8	13.5	13.1	12.4	11.1	7.5	5				
EUROSWIM 100 M - T	0.75	1	H (ft)	51	51	49	47	43	33	26	18			
			H (m)	15.4	15.4	15	14.2	13.1	10.0	7.8	5.6			
EUROSWIM 150 M	1.1	1.5	H (ft)	53	52	51	49	47	41	36	31	17		
			H (m)	16,2	15,9	15,4	14,9	14,2	12,4	11,1	9,3	5,3		
EUROSWIM 150 T	1.1	1.5	H (ft)	53	51	50	48	46	41	36	31	17		
			H (m)	16.2	15.6	15.2	14.6	13.9	12.4	11.1	9.3	5.3		
EUROSWIM 200 M - T	1.5	2	H (ft)	61	60	58	56	54	49	46	42	30	13	
			H (m)	18.6	18.2	17.7	17.1	16.5	15.0	14.1	12.8	9.0	4	
EUROSWIM 300 M - T	2.2	3	H (ft)	72	72	71	70	68	64	62	59	52	41	28
			H (m)	22.0	21.9	21.7	21.3	20.8	19.6	18.9	18.1	15.9	12.5	8.6

DAB PUMPS reserves the right to make modifications without notice

EUROSWIM

SWIMMING POOL CENTRIFUGAL PUMPS

DIMENSIONS AND WEIGHTS

EUROSWIM 50

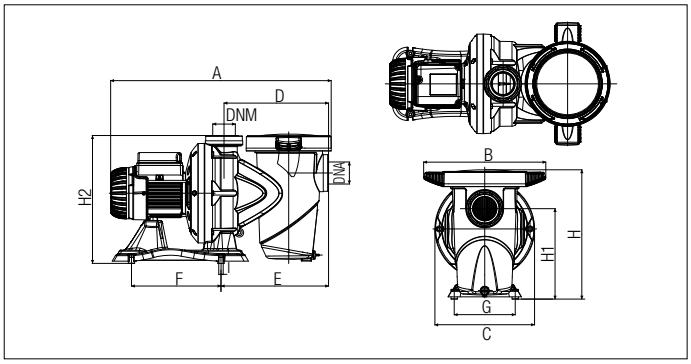

EUROSWIM 75 - 100

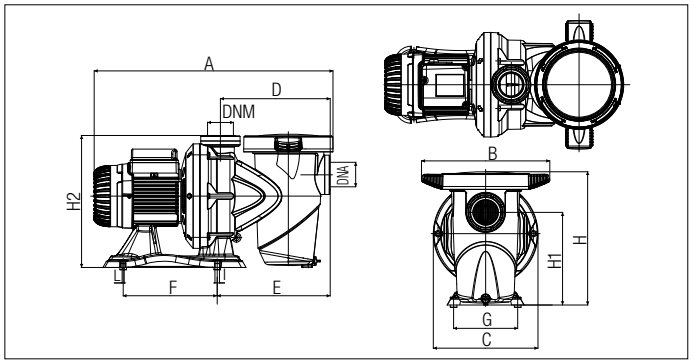

EUROSWIM 150 - 200

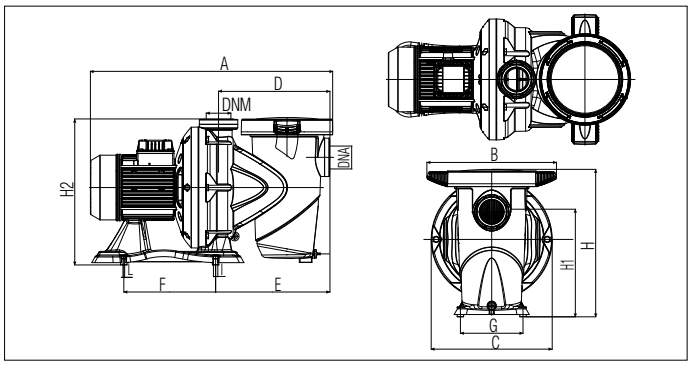

EUROSWIM 300

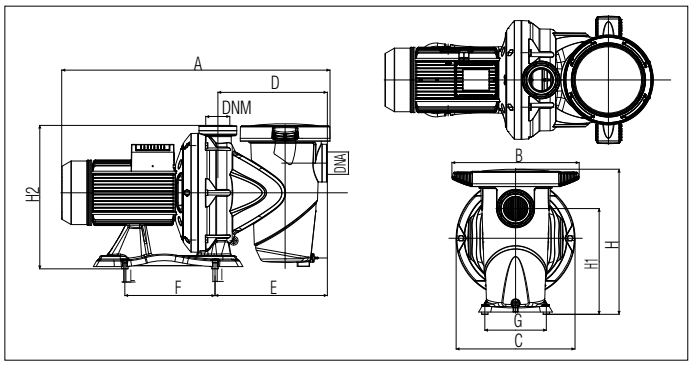

CONNECTING JUNCTIONS KIT 2”

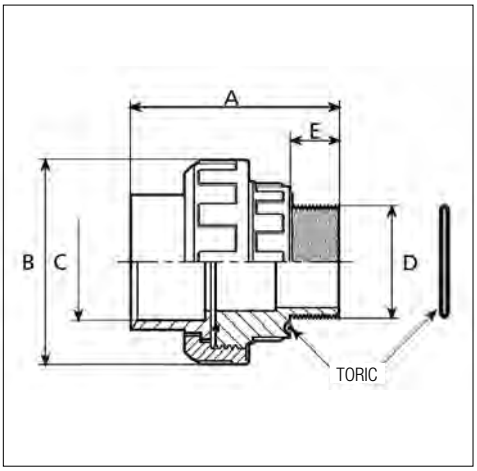

MODEL	units	A	B	C	D	E	F	G	H	H1	H2	I	L	DNA NPT	DNM NPT	PACKING DIMENSIONS L	PACKING DIMENSIONS B	PACKING DIMENSIONS H	WEIGHT	Q.TY x PALET
EUROSWIM 50 M	inch	21.3	11.8	9.6	10.1	10.4	8.7	5.9	12.5	8.7	12.4	0.4	0.3	2”	2”	23.6	14.2	15.7	24.5 lbs	8
	mm	542	300	245	257	265	220	150	317	222	314	11	6.5			600	360	400	11.1 Kg	
EUROSWIM 75 M - T	inch	22	11.8	9.6	10.1	10.4	8.7	5.9	12.5	8.7	12.4	0.4	0.3	2”	2”	23.6	14.2	15.7	26.7 lbs	8
	mm	559	300	245	257	265	220	150	317	222	314	11	6.5			600	360	400	12.1 Kg	
EUROSWIM 100 M - T	inch	22	11.8	9.6	10.1	10.4	8.7	5.9	12.5	8.7	12.4	0.4	0.3	2”	2”	23.6	14.2	15.7	30.4 lbs	8
	mm	559	300	245	257	265	220	150	317	222	314	11	6.5			600	360	400	13.8 Kg	
EUROSWIM 150 M	inch	22.9	12.2	11.4	10.5	10.8	8.7	5.9	13.9	10.2	13.8	0.4	0.3	2”	2”	28.3	13.8	16.9	39.5 lbs	8
	mm	581	311	290	267	274	220	150	353	258	350	11	6.5			720	350	430	17.9 Kg	
EUROSWIM 150 T	inch	22.9	12.2	11.4	10.5	10.8	8.7	5.9	13.9	10.2	13.8	0.4	0.3	2”	2”	28.3	13.8	16.9	36.8 lbs	8
	mm	581	311	290	267	274	220	150	353	258	350	11	6.5			720	350	430	16.7 Kg	
EUROSWIM 200 M	inch	25.8	12.2	11.4	10.5	10.8	8.7	5.9	13.9	10.2	13.8	0.4	0.3	2”	2”	28.3	13.8	16.9	44.1 lbs	6
	mm	655	311	290	267	274	220	150	353	258	350	11	6.5			720	350	430	20 Kg	
EUROSWIM 200 T	inch	22.9	12.2	11.4	10.5	10.8	8.7	5.9	13.9	10.2	13.8	0.4	0.3	2”	2”	28.3	13.8	16.9	38.8 lbs	6
	mm	581	311	290	267	274	220	150	353	258	350	11	6.5			720	350	430	17.6 Kg	
EUROSWIM 300 M - T	inch	25.8	12.2	11.4	10.5	10.8	8.7	5.9	13.9	10.2	13.8	0.4	0.3	2”	2”	28.3	13.8	16.9	43.9 lbs	6
	mm	655	311	290	267	274	220	150	353	258	350	11	6.5			720	350	430	19.9 Kg	
CONNECTION KIT 2”	inch	3.9	3.9	2/2.5	2”	0.8	-	-	-	-	-	-	-	-	-	-	-	-	1.5 lbs	-
	mm	99	99	50/63	2”	20	-	-	-	-	-	-	-			-	-	-	0.7 Kg	

ACCESSORIES - CONNECTING JUNCTIONS KIT 2”

DESCRIPTION
UNIONS KIT 2" / DN 50-63
UNIONS KIT 2” / 2” - 1” 1/2

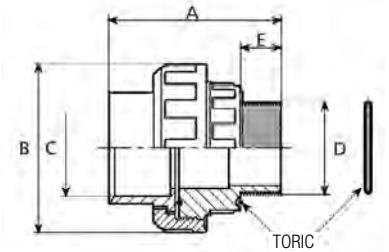

EUROCOM SP - JETCOM SP

SWIMMING POOL CENTRIFUGAL PUMPS



Self-priming centrifugal (Jetcom) or multistage (Eurocom) pump with excellent suction capability even when there are air bubbles. Suitable for use with water containing small sand impurities. Especially suitable for water supplies in domestic systems: handling of aggressive water in general with chlorine contents (swimming pools). Pump body in technopolymer.
Support and seal-carrier in AISI 316 STAINLESS STEEL.
Carbon/ceramic mechanical seal.
Rotor shaft in AISI 316 STAINLESS STEEL.
Impellers, diffuser, Venturi tube, and sand guard in technopolymer. Clearance rings in stainless steel.
Continuous duty asynchronous motor.
Built-in motor overload cut out and a capacitor permanently on in the single-phase version.
Protection for the three-phase version is the responsibility of the user.

Motor protection level IP 44
Terminals protection level IP 55
Insulation class F
Operating range from 2.6 to 21.1 gpm (10 to 80 l/min) with head of up to 190 ft (58 m) depending on the model
Liquid quality requirements clean, free of solid or abrasive contaminants, swimming pool water (containing chlorine)
Liquid temperature range
from 32°F to +95°F (0°C to +35°C) for domestic use
from 32°F to +104°F for other uses
Maximum ambient temperature +104°F
Maximum operating pressure 87 psi (6 bar)
Installation fixed or portable in horizontal position

TECHNICAL DATA

MODEL	CODE	ELECTRICAL DATA						
		VOLTAGE 60 Hz	P1 MAX kW	P2 NOMINAL		In A	CAPACITOR	
				kW	HP		µF	Vc
EUROCOM SP 40/506 M	60193516	1x115/230 V~	1.2	0.75	1	10.3 - 5	80	250
JETCOM SP 102 M	60193515	1x115/230 V~	1.1	0.75	1	9.7 - 5	50	250

RANGE PERFORMANCE

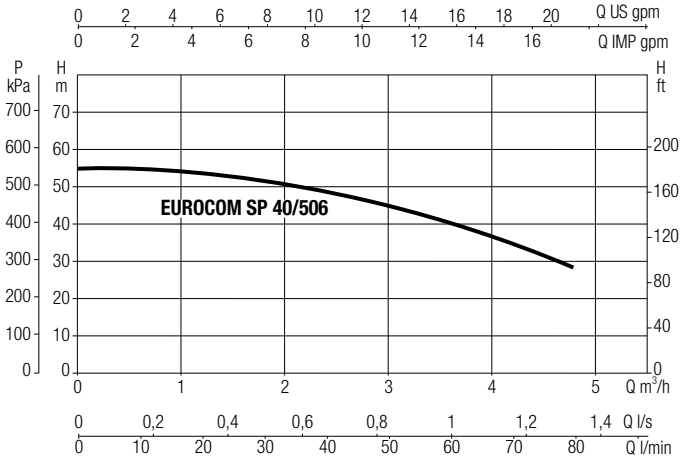

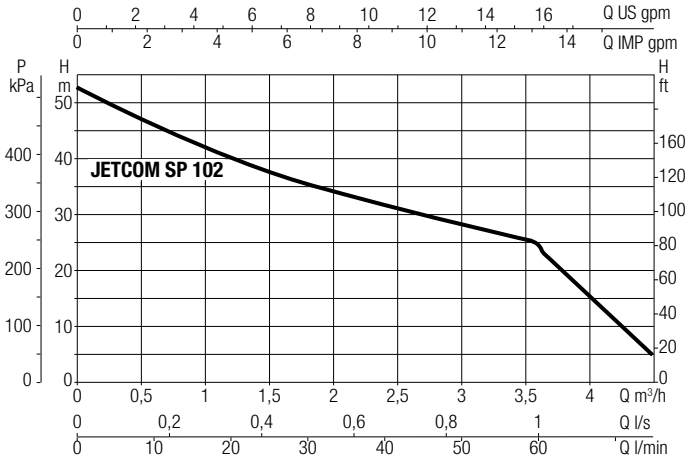

MODEL	P2 NOMINAL		Q=GPM	0	2.6	5.3	7.9	10.6	13.2	15.8	18.5	21.1	26.4
			Q=l/min	0	10	20	30	40	50	60	70	80	100
EUROCOM SP 40/506 M	0.75	1	H (ft)	170	167	166	161	151	138	120	95	75	19
			H (m)	51.7	51	50.5	49	46.1	42	36.6	29	23	5.9
JETCOM SP 102 M	0.75	1	H (ft)	144	122	105	93	83	71	62	33	5	
			H (m)	44	37.1	32.1	28.4	25.2	21.7	18.8	10	1.6	

EUROCOM SP - JETCOM SP

SWIMMING POOL CENTRIFUGAL PUMPS

DIMENSIONS AND WEIGHTS

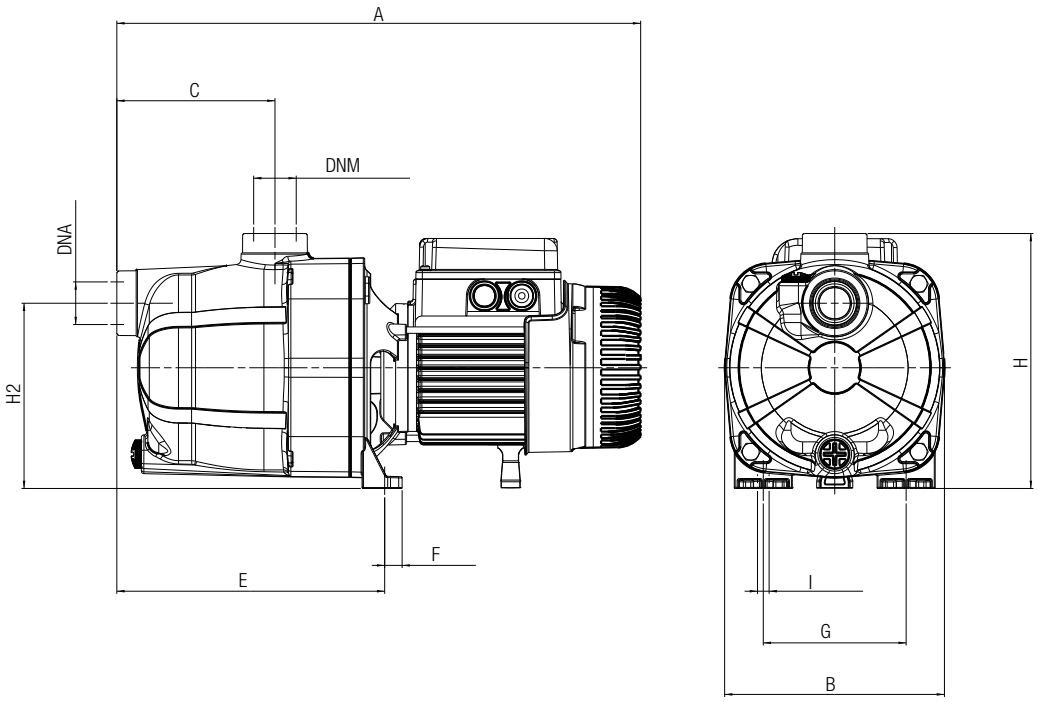

MODEL	units	A	B	C	E	F	G	IØ (4 Holes)	H	H1	DNA NPT	DNM NPT	PACKING DIMENSIONS			WEIGHT	Q.TY x PALLET
													L/A	L/B	H		
EUROCOM SP 40/50	inch	16.7	6.7	4.8	8.2	0.6	4.4	0.4	8	5.7	1"	1"	18.5	9.4	9.4	24.9 lbs	28
	mm	425	170	122	208	14	111	9	203	144			470	240	240	11.3 Kg	
JETCOM SP 102	inch	16.7	6.7	4.8	8.2	0.6	4.4	0.4	8	5.7	1"	1"	18.5	9.4	9.4	20.9 lbs	28
	mm	425	170	122	208	14	111	9	203	144			470	240	240	9.5 Kg	

NOTES

DAB PUMPS reserves the right to make modifications without notice

ACCESSORIES SWIMMING POOL

ACCESSORIES

SWIMMING POOL

E.SWIM ACCESSORIES	DESCRIPTION	CODE
	**CONNECTION CABLE 52 FT KIT 12 PIN**	60194430

DAB PUMPS reserves the right to make modifications without notice

NOTES

DAB PUMPS SELECTOR

On-line product selection

DAB PUMPS LTD.
6 Gilberd Court
Newcomen Way
Severalls Business Park
Colchester
Essex
CO4 9WN - UK
salesuk@dwtgroup.com
Tel. +44 0333 777 5010

DAB PUMPS BV
'tHofveld 6 C1
1702 Groot Bijgaarden - Belgium
info.belgium@dwtgroup.com
Tel. +32 2 4668353

DAB PUMPS B.V.
Albert Einsteinweg, 4
5151 DL Drunen - Nederland
info.netherlands@dwtgroup.com
Tel. +31 416 387280
Fax +31 416 387299

DAB PUMPS GMBH
Am Nordpark 3
D - 41069 Mönchengladbach - Germany
info.germany@dwtgroup.com
Tel. +49 2161 47388-0
Fax +49 2161 47388-36

DAB PUMPS IBERICA S.L.
Calle Verano 18-20-22
28850 - Torrejón de Ardoz - Madrid
Spain
Info.spain@dwtgroup.com
Tel. +34 91 6569545
Fax: + 34 91 6569676

DAB PUMPS HUNGARY KFT.
H-8800
Nagykanizsa, Buda Ernő u.5
Hungary
Tel. +36 93501700

DAB PUMPS POLAND Sp. z o.o.
Ul. Janka Muzykanta 60
02-188 Warszawa - Poland
polska@dabpumps.com.pl

OOO DAB PUMPS
Novgorodskaya str. 1, block G
office 308, 127247, Moscow - Russia
info.russia@dwtgroup.com
Tel. +7 495 122 0035
Fax +7 495 122 0036

DAB PUMPS INC.
3226 Benchmark Drive
Ladson, SC 29456 - USA
info.usa@dwtgroup.com
Tel. 1- 843-797-5002
Fax 1-843-797-3366

DAB PUMPS SOUTH AFRICA (PTY) LTD
Twenty One industrial Estate,
16 Purlin Street, Unit B, Warehouse 4
Olifantsfontein -1666 - South Africa
info.sa@dwtgroup.com
Tel. +27 12 361 3997

DAB PUMPS (QINGDAO) CO. LTD.
No.40 Kaituo Road, Qingdao Economic & Technological
Development Zone
Qingdao City, Shandong Province - China
PC: 266500
sales.cn@dwtgroup.com
Tel. +86 400 186 8280
Fax +86 53286812210

DAB PUMPS DE MÉXICO, S.A. DE C.V.
Av Amsterdam 101 Local 4
Col. Hipódromo Condesa,
Del. Cuauhtémoc CP 06170
Ciudad de México
Tel. +52 55 6719 0493

DAB PUMPS OCEANIA PTY LTD
426 South Gippsland Hwy,
Dandenong South VIC 3175 – Australia
info.oceania@dwtgroup.com
Tel. +61 1300 373 677

PT DAB PUMPS INDONESIA
Satrio Tower lantai 26
unit C-D, Jl. Prof. Dr. Satrio Kav. C4,
Kel. Kuningan Timur, Kec. Setiabudi, Kota Adm.
Jakarta Selatan, Prov. DKI Jakarta. - Indonesia
Tel. +62 2129222850

60200597 - 05/2021

DAB WATER•TECHNOLOGY

Via Marco Polo, 14
35035 Mestrino (PD) Italy
Tel. +39.049.5125000 - Fax +39.049.5125950
www.dabpumps.com

DAB Pumps
3061 Orlando Drive
Mississauga, ON
L4V 1R4 - Canada

Toll-free number **1-833-322-7867**
(1-VFD-DAB-PUMP)