DAB
WATER•TECHNOLOGY

EVOSTA 2
EVOSTA 2d

ELECTRONIC CIRCULATOR FOR HOT WATER

C US

DAB
WATER•TECHNOLOGY

HEATING | CONDITIONING

EVOSTA 2
EVOSTA 2d

ELECTRONIC
CIRCULATORS

Display (d- version)
Shows the real working point

Energy saving | Ideal for replacement | IPX5 Water resistant | Airvent plug

DABPUMPS.COM

EVOSTA 2 SAN

Hot Water
recirculating

Drinking Water
NSF / ANSI 61

Drinking Water
approved

Pump body in stainless steel

EVOSTA2

WET ROTOR ELECTRONIC CIRCULATORS

TECHNICAL DATA

Operating range: 0.8 - 15.1 gpm with head up to 18 ft.
Pumped liquid temperature range: from +14 °F (-10°C) to +230 °F (110°C).
Working pressure: 145 psi 10 bar (1000 kPa).
Protection class: IP X5. Protected against jets of water. For indoor use only
Insulation class: F.
Installation: with horizontal motor axis.
Standard power input: single-phase 1 x 110-127 V~ 60 Hz.
Pumped liquid: Clean, free of solids and mineral oils, non-viscous, chemically neutral, with properties similar to water (glycol max 30%).

APPLICATIONS

Low energy consumption electronic pump for hot water circulation in all types of domestic heating systems.

ADVANTAGES

Thanks to the advanced technology employed, the **permanent magnet synchronous motor** and its **electronic driver (also called ECM: Electronic Commutation Motor** or **BLDC motor: Brushless DC motor)**, the new range of **EVOSTA2** circulators ensures high efficiency in all applications, with significant benefits in terms of energy saving. The circulator has a built-in electronic device that detects the changes demanded by the system, and automatically adapts the circulator performance accordingly, always ensuring optimum efficiency and minimum energy consumption.
The **EVOSTA2** circulator is also suitable for replacing old three-speed circulators, both as far as size, as it has the same dimensions of the VA series, and for its capability of covering pumps with heads of up to 18 feet with one single model. It can also simplify the work of the user, thanks to a single sequential setting button and a breather plug used to degas the system and unlock the motor shaft if required.

The EVOSTA2 circulators can operate in 3 different modes:

- Proportional differential pressure 3 curves
- Constant differential pressure 3 curves
- Fixed curve 3 curves

CONSTRUCTION FEATURES

- Pump body in cast iron with cataphoresis treatment EVOSTA2 SAN version with Stainless Steel
- Motor casing in stainless steel
- Motor casing cover in technopolymer
- Motor shaft in ceramic (alumina)
- IPX5: Protected against water jets. For indoor use only.

MATERIALS

N.	PARTS	MATERIALS
1	ROTOR CAN FLANGE	STAINLESS STEEL AISI 316
2	IMPELLER	ULTRASON
3	MOTOR SHAFT	CERAMIC (ALUMINA)
4	ROTOR	Fe
5	BEARING HOUSING	BRASS
6	BEARING	ALUMINA
7	AXIAL BEARING	GRAPHITE
8	AXIAL HOUSING	EPDM
9	PLUG	BRASS
10	O-RING	EPDM
11	STATOR HOUSING	STAINLESS STEEL AISI 304
12	OUTER SHELL	POLYCARBONATE
13	COVER	POLYCARBONATE
14	ROTOR SLEVE	STAINLESS STEEL AISI 304
15	SEAL	EPDM
16	PUMP HOUSING	Standard version CAST IRON with cataphoresis treatment
		SANITARY version STAINLESS STEEL
17	NECK RING	POLYCARBONATE

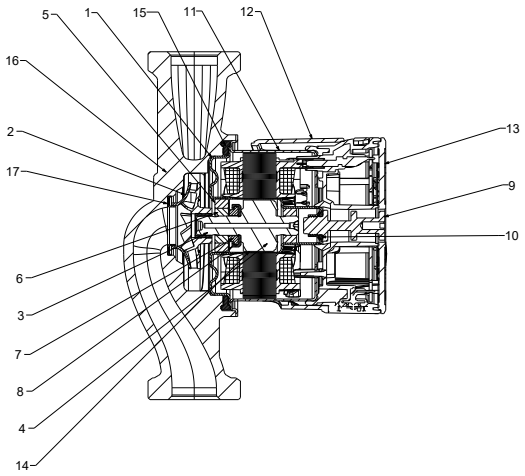

OPERATING MODES

EVOSTA 2

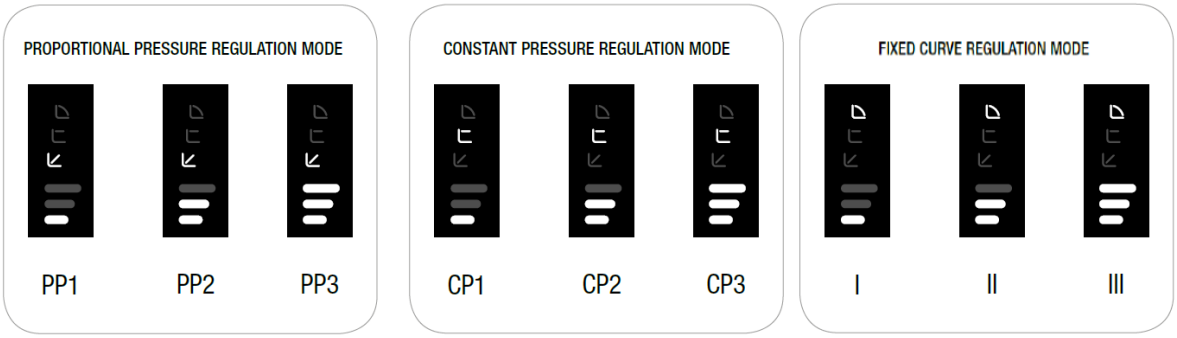

EVOSTA 2d

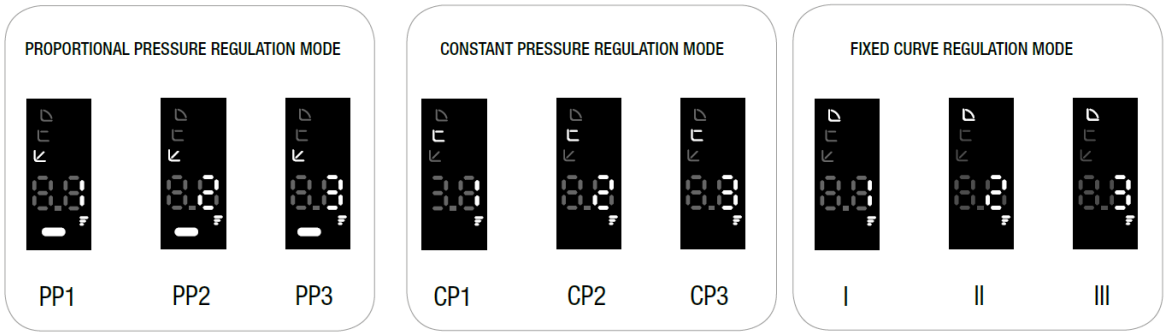

2 Bolt Flange

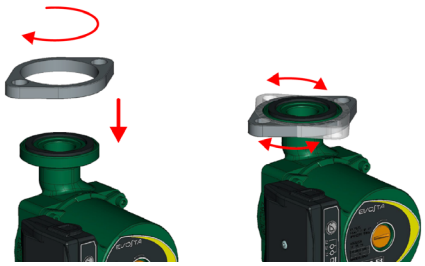

Check Valve

360° Rotation around a vertical axis

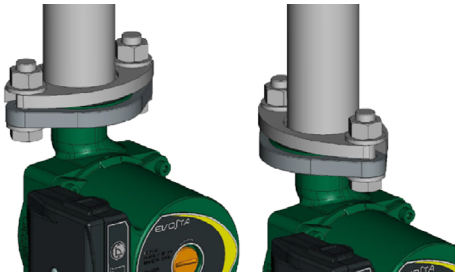

EVOSTA2 - ELECTRONIC CIRCULATORS FOR DOMESTIC HEATING SYSTEMS - SINGLE, WITH UNIONS

Pumped liquid temperature range: from +14 °F to +230 °F - **Maximum operating pressure:** 145 psi 10 bar (1000 kPa)

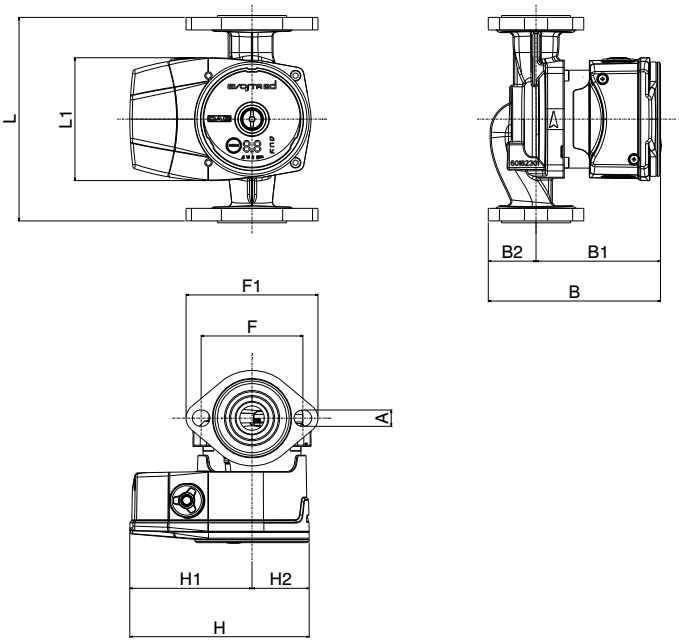

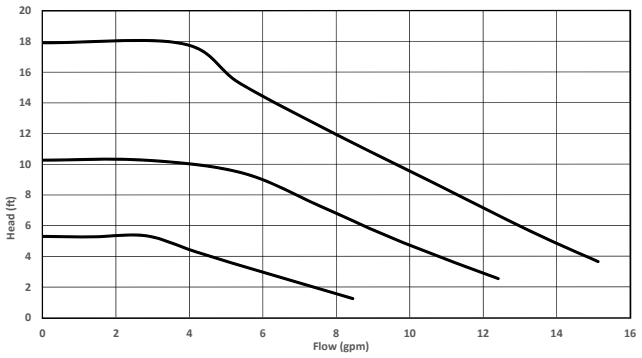

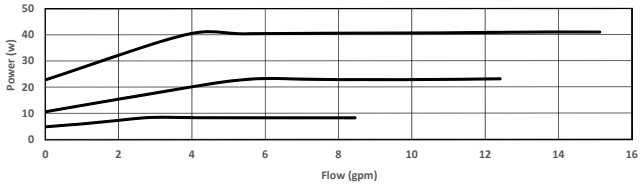

CONSTANT SPEED

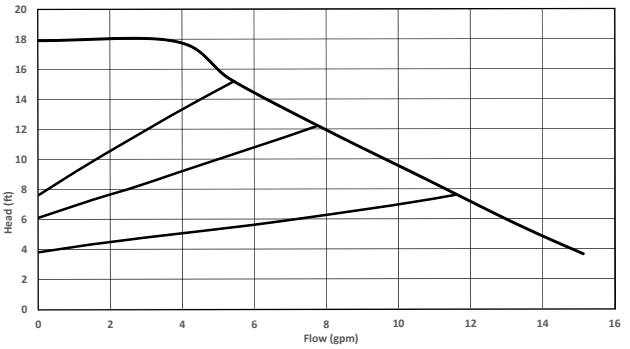

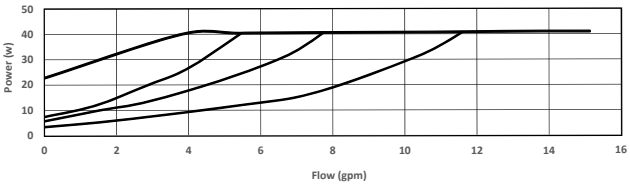

PROPORTIONAL PRESSURE

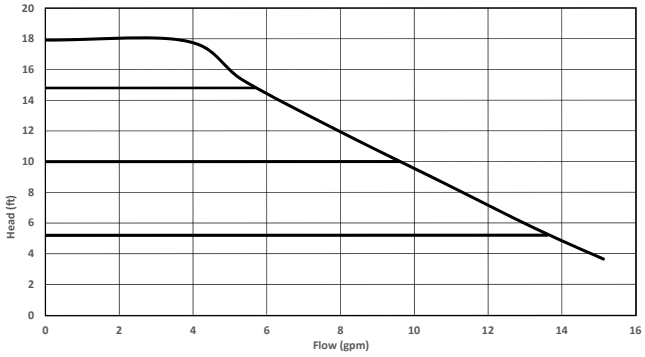

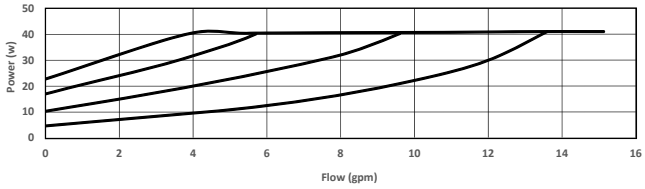

CONSTANT PRESSURE

The performance curves are based on kinematic viscosity values = 1 mm^2/s and density equal to 1000 kg/m^3. Curve tolerance according to ISO 9906.

MODEL	Q=gpm	0	2	4	6	8	10	12	14	15.12
EVOSTA 2	H (ft)	17.92	17.85	17.81	14.38	11.98	9.42	7.01	4.79	3.34

MODEL	CENTRE DISTANCE	FLANGE	POWER INPUT 60 Hz	P1 MAX Hp (w)	In A	EEI *	MINIMUM SUCTION PRESSURE	
							t°	194 °F
EVOSTA 2	6 3/8 "	OVAL 2 BOLT	1 x 110-127 V ~	1/200 (4) 1/20 (41)	0.064 0.61	EEI ≤ 0,23	ft.c.w. psi	32.8 14.3

MODEL	L	L1	B	B1	B2	H	H1	H2	A	F	F1	PACKING DIMENSIONS			VOLUME ft^3	WEIGHT lbs
												L	B	H		
EVOSTA 2	6 3/8 "	5 55/64 "	5 25/64 "	3 57/64 "	1 1/2 "	5 5/8 "	3 13/64 "	1 13/64 "	33/64 "	3 3/16 "	4 9/64 "	5 23/64 "	7 1/4 "	6 17/32 "	0.1467	5.73

DAB PUMPS reserves the right to make modifications without notice

DAB WATER•TECHNOLOGY

NOTES

Via Marco Polo, 14 - 35035 Mestrino (PD) Italy - Tel. +39.049.5125000 - Fax +39.049.5125950
www.dabpumps.com

DAB PUMPS INC.
3226 Benchmark Drive
Ladson, SC 29456 - USA
www.dabpumps.us
info.usa@dwtgroup.com
Tel. 1-843-797-5002
Fax 1-843-797-3366

DAB PUMPS LTD.
Unit 6 Gilberd Court
Newcomen Way, Severalls Park
Colchester CO4 9WN
United Kingdom
www.dabpumps.co.uk
salesuk@dwtgroup.com
Tel. +44 1279 652 776
Fax +44 1279 657 727

DAB PUMPS B.V.
Brusselstraat 150
B-1702 Groot-Bijgaarden - Belgium
info.belgium@dwtgroup.com
Tel. +32 2 4668353
Fax +32 2 4669218

DAB PUMPS B.V.
Albert Einsteinweg, 4
5151 DL Drunen - Nederland
info.netherlands@dwtgroup.com
Tel. +31 416 387280
Fax +31 416 387299

DAB PUMPEN DEUTSCHLAND GmbH
Tackweg 11
D - 47918 Tönisvorst - Germany
info.germany@dwtgroup.com
Tel. +49 2151 82136-0
Fax +49 2151 82136-36

DAB PUMPS IBERICA S.L.
Calle Verano 18-20-22
28850 - Torrejón de Ardoz - Madrid
Spain
Info.spain@dwtgroup.com
Tel. +34 91 6569545
Fax: + 34 91 6569676

DAB PUMPS HUNGARY KFT.
H-8800
Nagykanizsa, Buda Ernő u.5
Hungary
Tel. +36 93501700

DAB PUMPS POLAND Sp. z o.o.
Mokotów Marynarska
ul. Postępu 15C
02-676 Warszawa - Poland
polska@dabpumps.com.pl
Tel. +48 223 816 085

OOO DAB PUMPS
Novgorodskaya str. 1, block G
office 308, 127247, Moscow - Russia
info.russia@dwtgroup.com
Tel. +7 495 122 0035
Fax +7 495 122 0036

DAB PUMPS INC.
3226 Benchmark Drive
Ladson, SC 29456 - USA
info.usa@dwtgroup.com
Tel. 1- 843-797-5002
Fax 1-843-797-3366

DAB PUMPS SOUTH AFRICA PTY
Twenty One industrial Estate,
16 Purlin Street, Warehouse 4, Unit B
Olifantsfontein - South - Africa
info.sa@dwtgroup.com
Tel. +27 12 361 3997
Fax +27 12 361 3137

DAB PUMPS (QINGDAO) CO. LTD.
No.40 Kaituo Road, Qingdao Economic & Technological
Development Zone
Qingdao City, Shandong Province - China
PC: 266500
sales.cn@dwtgroup.com
Tel. +86 400 186 8280
Fax +86 53286812210

DAB PUMPS DE MÉXICO, S.A. DE C.V.
Av Amsterdam 101 Local 4
Col. Hipódromo Condesa,
Del. Cuauhtémoc CP 06170
Ciudad de México
Tel. +52 55 6719 0493

DAB PUMPS OCEANIA PTY LTD
426 South Gippsland Hwy,
Dandenong South VIC 3175 – Australia
info.oceania@dwtgroup.com
Tel. +61 1300 373 677

EVOSTA2 - USA - 01/2021